NBR Series

Wheel Diameter × Wheel Width 300 x 76mm

EAN

YJ-12040412306301

Made of High-Quality Resilient Rubber Features excellent handling comfort, superior Floor Surface Preservation, and Shock-Absorbing. Excellent resistance to chemicals, solvents, and corrosion. Suitable for industrial and heavy-duty wheels. Rubber, Black, Curved Wheel Surface

Wheel Center: cast iron core
Outer packaging: rubber
Bearings: —

Drawings are for reference only and may differ from the product



Picture may differ from original product

Technical Data

◉ Metric ○ Imperial

Wheel Diameter(D)	300mm
Wheel Width(T2)	76mm
Wheel Bearing	Without Bearing
Axle Bore(d)	—
Axle Bore(S)	62mm
Bearing Bore Depth(t)	24.5mm
Hub Lenth(T1)	74mm
Hardness Of Tread	85±5° Shore A
Load Capacity (Dynamic)	550kgs
Load Capacity (Static)	825kgs
Temperature	-20°C to +80°C
Electrical Conductivity	N/A
Anti-Static	N/A
Weight	9.68kgs
Standard	ISO22883

Advantages at a glance

Rolling Resistance	● ● ● ○ ○
Operating Noise	● ● ● ● ○
Floor Surface Preservation	● ● ● ● ○

2D Dimensional Drawing of Single Wheel

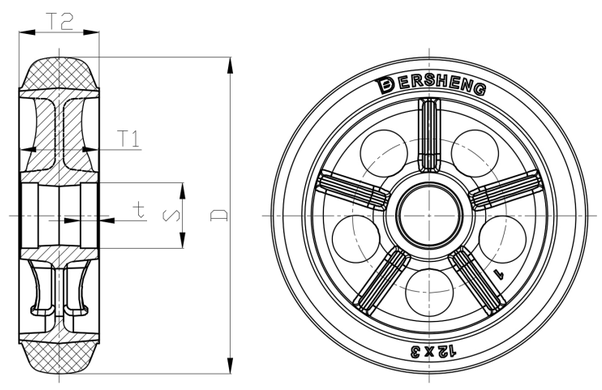

* For any deviation between metric and imperial spec, please refer to the metric spec.

© Copyright 2026 DershengInternational www.dersheng.com