NBR Series

Wheel Diameter × Wheel Width 250 x 50mm

EAN

YJ-12040410206271



Drawings are for reference only and may differ from the product

Picture may differ from original product

Technical Data

◉ Imperial ○ Metric

Wheel Diameter(D)	10 "
Wheel Width(T2)	2 "
Wheel Bearing	Ball Bearing
Axle Bore(d)	1 "
Axle Bore(S)	—
Bearing Bore Depth(t)	—
Hub Lenth(T1)	2 "
Hardness Of Tread	85±5° Shore A
Load Capacity (Dynamic)	882lbs
Load Capacity (Static)	1323lbs
Temperature	-4°F to +176°F
Electrical Conductivity	N/A
Anti-Static	N/A
Weight	9.9lbs
Standard	ISO22883

Advantages at a glance

Rolling Resistance	● ● ● ○ ○
Operating Noise	● ● ● ● ○
Floor Surface Preservation	● ● ● ● ○

2D Dimensional Drawing of Single Wheel

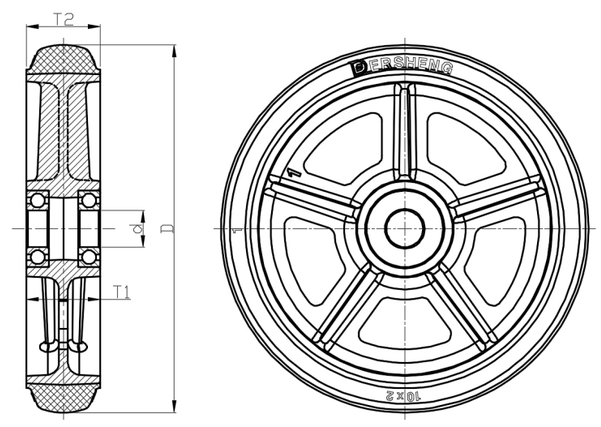

* For any deviation between metric and imperial spec, please refer to the metric spec.

© Copyright 2026 DershengInternational www.dersheng.com