NBR Series

Wheel Diameter × Wheel Width 250 x 50mm

EAN

YJ-12040410206271



Drawings are for reference only and may differ from the product

Picture may differ from original product

Technical Data

◉ Metric ○ Imperial

Wheel Diameter(D)	250mm
Wheel Width(T2)	50mm
Wheel Bearing	Ball Bearing
Axle Bore(d)	25mm
Axle Bore(S)	—
Bearing Bore Depth(t)	—
Hub Lenth(T1)	50mm
Hardness Of Tread	85±5° Shore A
Load Capacity (Dynamic)	400kgs
Load Capacity (Static)	600kgs
Temperature	-20°C to +80°C
Electrical Conductivity	N/A
Anti-Static	N/A
Weight	4.50kgs
Standard	ISO22883

Advantages at a glance

Rolling Resistance	● ● ● ○ ○
Operating Noise	● ● ● ● ○
Floor Surface Preservation	● ● ● ● ○

2D Dimensional Drawing of Single Wheel

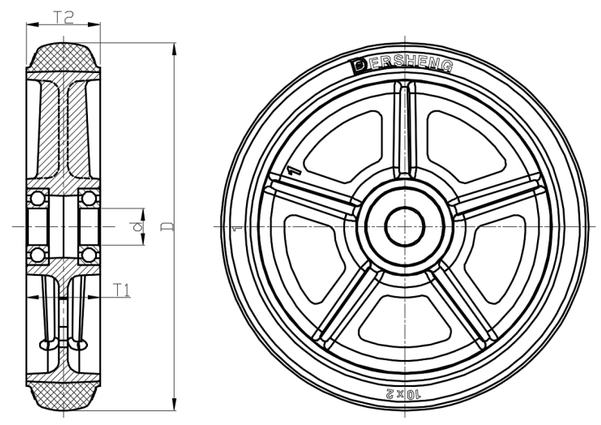

* For any deviation between metric and imperial spec, please refer to the metric spec.

© Copyright 2026 DershengInternational www.dersheng.com