HPU Series

Wheel Diameter × Wheel Width 170 x 50mm

YJ-12037607200100

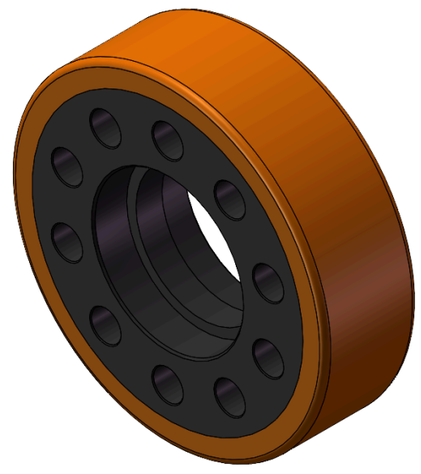

Picture may differ from original product

Drawings are for reference only and may differ from the product

Technical Data

◉ Imperial ○ Metric

Wheel Diameter(D)	6-13/16
Wheel Width(T2)	2 "
Wheel Bearing	Without Bearing
Axle Bore(d)	—
Axle Bore(S)	3-3/16 "
Bearing Bore Depth(t)	3/4 "
Hub Lenth(T1)	—
Hardness Of Tread	92±5° Shore A
Load Capacity (Dynamic)	1499lbs
Load Capacity (Static)	2249lbs
Temperature	-4°F to +158°F
Electrical Conductivity	N/A
Anti-Static	N/A
Weight	8.7lbs
Standard	ISO22883

Advantages at a glance

Rolling Resistance	●●●●●
Operating Noise	●●●●○
Floor Surface Preservation	●●●●●

2D Dimensional Drawing of Single Wheel

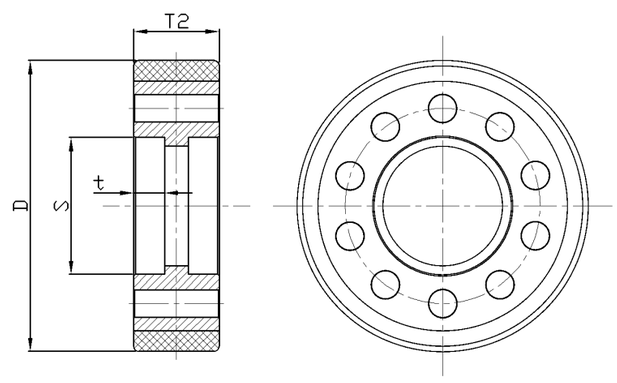

* For any deviation between metric and imperial spec, please refer to the metric spec.

© Copyright 2026 DershengInternational www.dersheng.com