HPU Series

Wheel Diameter × Wheel Width 100 x 25mm

YJ-12037604100103

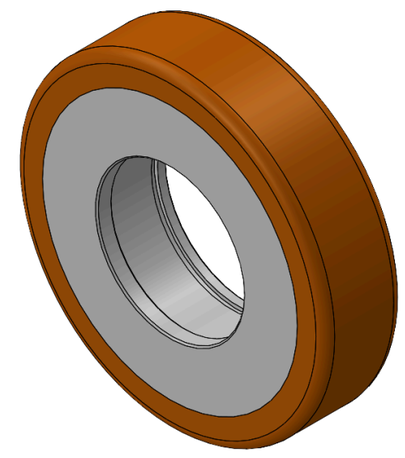

Picture may differ from original product

Drawings are for reference only and may differ from the product

Technical Data

◉ Imperial ○ Metric

Wheel Diameter(D)	4 "
Wheel Width(T2)	5-1/25 "
Wheel Bearing	Without Bearing
Axle Bore(d)	—
Axle Bore(S)	2-3/16 "
Bearing Bore Depth(t)	11/16 "
Hub Lenth(T1)	—
Hardness Of Tread	82±5° Shore A
Load Capacity (Dynamic)	441lbs
Load Capacity (Static)	661lbs
Temperature	-4°F to +140°F
Electrical Conductivity	N/A
Anti-Static	N/A
Weight	1.6lbs
Standard	ISO22883

Advantages at a glance

Rolling Resistance	●●●●○
Operating Noise	●●●●○
Floor Surface Preservation	●●●●●

2D Dimensional Drawing of Single Wheel

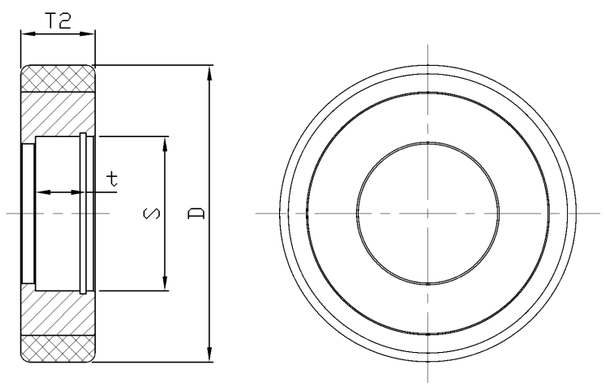

* For any deviation between metric and imperial spec, please refer to the metric spec.

© Copyright 2026 DershengInternational www.dersheng.com