HPU Series

Wheel Diameter × Wheel Width 79 x 35mm

YJ-12037603156201

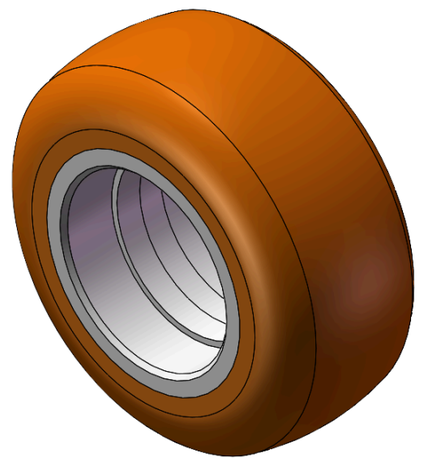

Picture may differ from original product

Drawings are for reference only and may differ from the product

Technical Data

◉ Metric ○ Imperial

Wheel Diameter(D)	79mm
Wheel Width(T2)	35mm
Wheel Bearing	Without Bearing
Axle Bore(d)	—
Axle Bore(S)	40mm
Bearing Bore Depth(t)	12mm
Hub Lenth(T1)	—mm
Hardness Of Tread	92±5° Shore A
Load Capacity (Dynamic)	180kgs
Load Capacity (Static)	270kgs
Temperature	-20°C to +70°C
Electrical Conductivity	N/A
Anti-Static	N/A
Weight	0.30kgs
Standard	ISO22883

Advantages at a glance

Rolling Resistance	●●●●●
Operating Noise	●●●●○
Floor Surface Preservation	●●●●●

2D Dimensional Drawing of Single Wheel

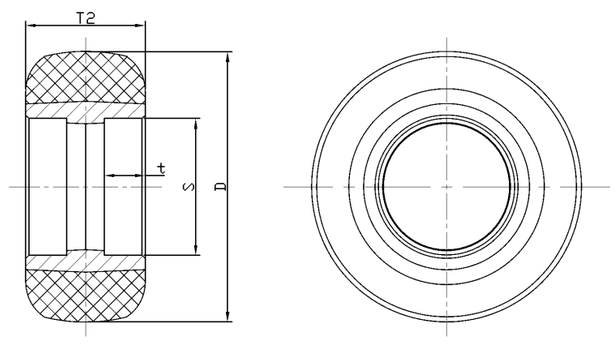

* For any deviation between metric and imperial spec, please refer to the metric spec.

© Copyright 2026 DershengInternational www.dersheng.com