XPU Series

Wheel Diameter × Wheel Width 100 x 50mm

EAN

YJ-12036404206192

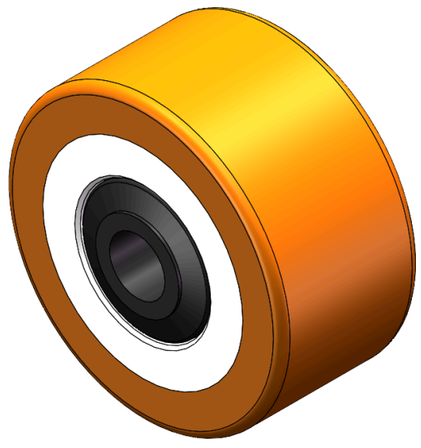

Picture may differ from original product

Drawings are for reference only and may differ from the product

Technical Data

◉ Imperial ○ Metric

Wheel Diameter(D)	4 "
Wheel Width(T2)	2 "
Wheel Bearing	Ball Bearing
Axle Bore(d)	13/16 "
Axle Bore(S)	—
Bearing Bore Depth(t)	—
Hub Lenth(T1)	2-3/16 "
Hardness Of Tread	92±5° Shore A
Load Capacity (Dynamic)	1102lbs
Load Capacity (Static)	1653lbs
Temperature	-4°F to +158°F
Electrical Conductivity	N/A
Anti-Static	N/A
Weight	3.3lbs
Standard	ISO22883

Advantages at a glance

Rolling Resistance	●●●○○
Operating Noise	●●●●○
Floor Surface Preservation	●●●●○

2D Dimensional Drawing of Single Wheel

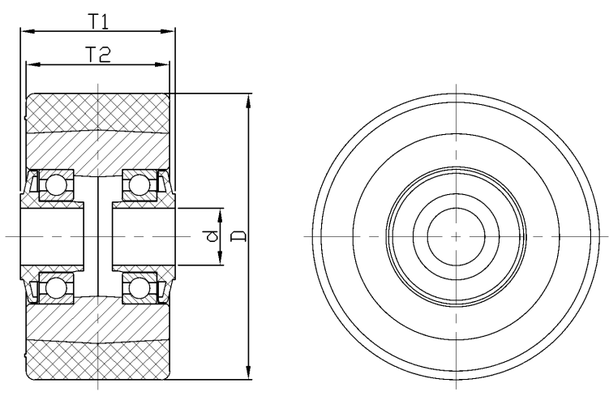

* For any deviation between metric and imperial spec, please refer to the metric spec.

© Copyright 2026 DershengInternational www.dersheng.com