VQPU Series

Wheel Diameter × Wheel Width 250 x 62mm

EAN

YJ-12035410256328

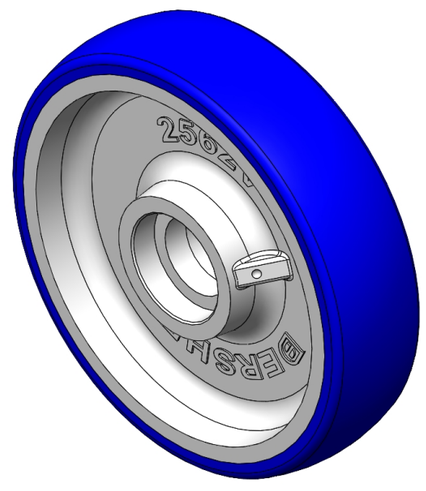

Picture may differ from original product

Good elasticity, reduces pushing resistance, improves machine controllability, and has good wear resistance.
Excellent Hydrolysis Resistance.
Suitable for tropical regions and humid working environments.
QPU Blue, Curved Wheel Surface

Wheel Center: cast iron core

Wheel Tread: High-quality polyurethane

Bearings: —

Drawings are for reference only and may differ from the product

Technical Data

◉ Imperial ○ Metric

Wheel Diameter(D)	10 "
Wheel Width(T2)	2-1/2 "
Wheel Bearing	Without Bearing
Axle Bore(d)	—
Axle Bore(S)	2-1/2 "
Bearing Bore Depth(t)	11/16 "
Hub Lenth(T1)	2-7/16 "
Hardness Of Tread	87±5° Shore A
Load Capacity (Dynamic)	2646lbs
Load Capacity (Static)	3968lbs
Temperature	-4°F to +158°F
Electrical Conductivity	N/A
Anti-Static	N/A
Weight	16.8lbs
Standard	ISO22883

Advantages at a glance

Rolling Resistance	● ● ● ● ●
Operating Noise	● ● ● ● ●
Floor Surface Preservation	● ● ● ● ●

2D Dimensional Drawing of Single Wheel

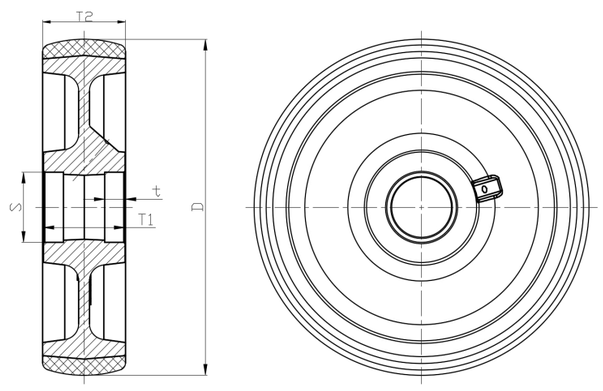

* For any deviation between metric and imperial spec, please refer to the metric spec.

© Copyright 2026 DershengInternational www.dersheng.com