VQPU Series

Wheel Diameter × Wheel Width 250 x 62mm

EAN

YJ-12035410256328

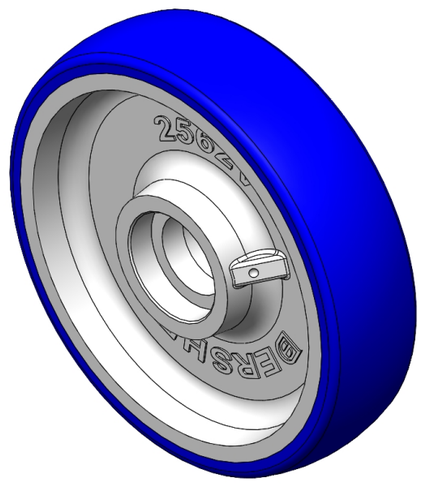

Picture may differ from original product

Good elasticity, reduces pushing resistance, improves machine controllability, and has good wear resistance.
Excellent Hydrolysis Resistance.
Suitable for tropical regions and humid working environments.
QPU Blue, Curved Wheel Surface

Wheel Center: cast iron core
Wheel Tread: High-quality polyurethane
Bearings: —

Drawings are for reference only and may differ from the product

Technical Data

◉ Metric ○ Imperial

Wheel Diameter(D)	250mm
Wheel Width(T2)	62mm
Wheel Bearing	Without Bearing
Axle Bore(d)	—
Axle Bore(S)	62mm
Bearing Bore Depth(t)	16mm
Hub Lenth(T1)	61mm
Hardness Of Tread	87±5° Shore A
Load Capacity (Dynamic)	1200kgs
Load Capacity (Static)	1800kgs
Temperature	-20°C to +70°C
Electrical Conductivity	N/A
Anti-Static	N/A
Weight	7.60kgs
Standard	ISO22883

Advantages at a glance

Rolling Resistance	● ● ● ● ●
Operating Noise	● ● ● ● ●
Floor Surface Preservation	● ● ● ● ●

2D Dimensional Drawing of Single Wheel

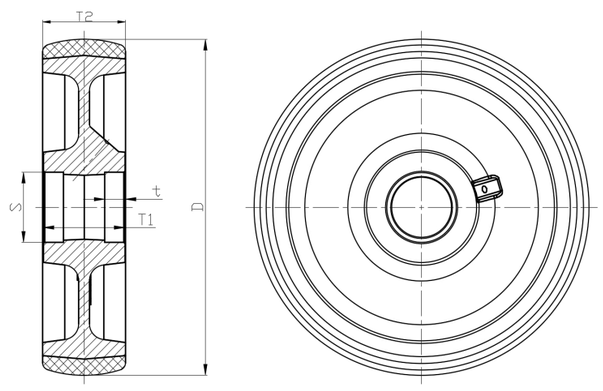

* For any deviation between metric and imperial spec, please refer to the metric spec.

© Copyright 2026 DershengInternational www.dersheng.com