Product Data Sheet

1151D Heavy Duty 1.5" Wide General Purposes Caster Series

QPU (Brown round) Wheel Diameter × Wheel Width 125 x 40mm

EAN

YJ-11510500531013

Rigid Caster with integral Stamping Fork and 85 x 70mm (3-3/8" x 2-3/4") Bolt Hole Spacing. Zine-Plated, Top Plate (3.5T) Mounting Type system. Cast Iron Wheel Center with High Quality Polyurethane tread. Brown color, Ball Bearing.

Wheel tread: Made of high-quality polyurethane

Wheel Center: cast iron core

Drawings are for reference only and may differ from the product

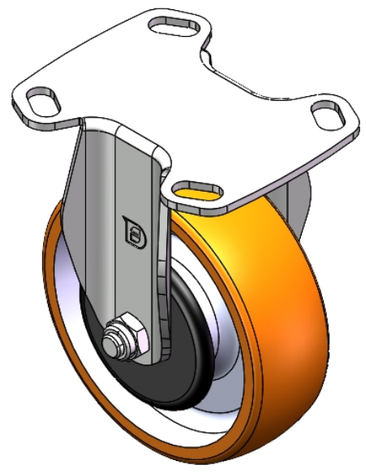

Picture may differ from original product

Technical Data

◉ Imperial ○ Metric

Wheel Diameter	5 "
Wheel Width	1-5/8 "
Wheel Bearing	Wheels With Ball Bearings
Plate Size	4-11/16 " x 3-13/16 "
Bolt Hole Spacing	3-7/16 " x 2-13/16 "
Plate Hole	13/16 " x 3/8 "
Overall Height	6-1/8 "
Hardness Of Tread	92±5° Shore A
Load Capacity (Dynamic)	772lbs
Load Capacity (Static)	1157lbs
Temperature	-4°F to +158°F
Fork Type	Rigid Caster
Stainless	N/A
Electrical Conductivity	N/A
Anti-Static	N/A
Weight	2.8lbs
Standard	ISO22883

Advantages at a glance

Rolling Resistance	● ● ● ● ●
Operating Noise	● ● ● ● ●
Floor Surface Preservation	● ● ● ● ●

Dimensions

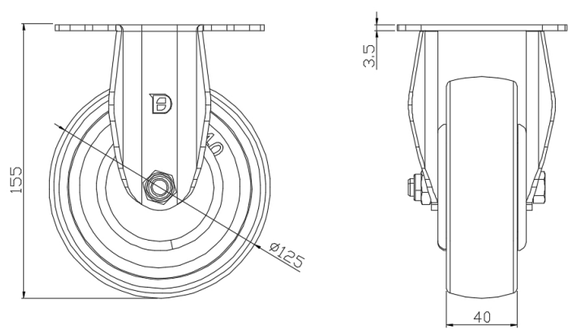

Mounting

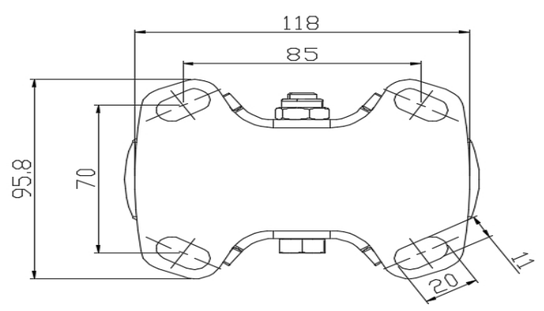

* For any deviation between metric and imperial spec, please refer to the metric spec.

© Copyright 2025 DershengInternational www.dersheng.com