Product Data Sheet

1139 Medium Duty General Purposes Caster Series

PPR (Plain Bearing) (Pearlescent dark gray) Wheel Diameter × Wheel Width 100 x 31mm

EAN

YJ-11390400261043

Rigid castor, Stamping Fabricated Caster Fork - 75 x 45 mm (3" x 1-3/4") Bolt Hole Spacing Zine-Plated, Mounting Type - Top Plate High-quality Impact Resistance Polypropylene Wheel Center, TPR Wheel Tread Pearl grey, wheel - Plain Bearing.

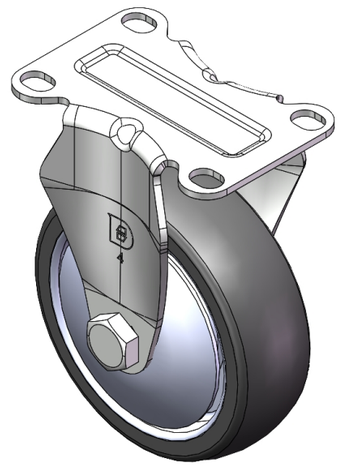

Picture may differ from original product

Wheel tread: Thermoplastic rubber elastomer (TPR)

Wheel Center: Made of high-quality impact-resistant polypropylene

Drawings are for reference only and may differ from the product

Technical Data

◉ Imperial ○ Metric

Wheel Diameter	4 "
Wheel Width	1-1/4 "
Wheel Bearing	Wheel With Plain Bearing
Plate Size	3-11/16 " x 2-1/2 "
Bolt Hole Spacing	3 " x 1-13/16 "
Plate Hole	1/2 " x 23/64 "
Overall Height	5-3/16 "
Hardness Of Tread	82±5° Shore A
Load Capacity (Dynamic)	220lbs
Load Capacity (Static)	331lbs
Temperature	-4°F to +140°F
Fork Type	Rigid Caster
Stainless	N/A
Electrical Conductivity	N/A
Anti-Static	N/A
Weight	0.9lbs
Standard	ISO22883

Advantages at a glance

Rolling Resistance	● ● ● ● ○
Operating Noise	● ● ● ● ○
Floor Surface Preservation	● ● ● ● ●

Dimensions

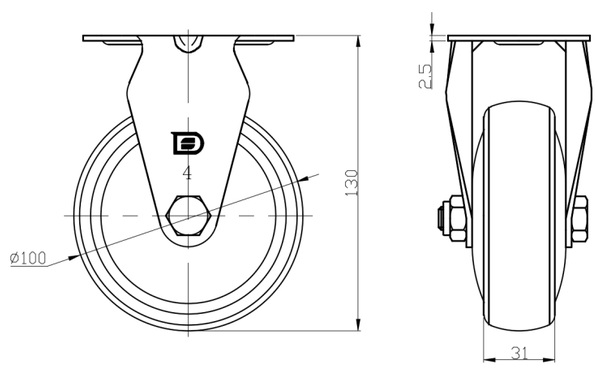

Mounting

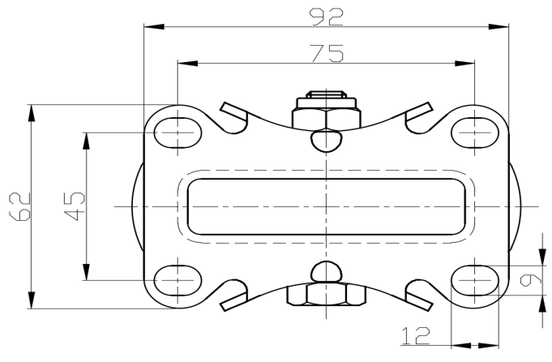

* For any deviation between metric and imperial spec, please refer to the metric spec.

© Copyright 2025 DershengInternational www.dersheng.com