Product Data Sheet

1139 Medium Duty General Purposes Caster Series

W Resolute (Pearlescent dark gray) Wheel Diameter × Wheel Width 75 x 31mm

EAN

YJ-11390300456093

Castors with Total Brake Locking system. Threaded Fork - M16-P2.0 Surface zinc-plated, Mounting Type - Threaded Stem Reinforced impact-resistant High-quality Impact Resistance Polypropylene Wheel Center,High-Quality Thermoplastic Rubber (TPR) Wheel Wheel Tread Pearl-finish dark grey, Bearing - Ball Bearing.

Wheel tread: Thermoplastic rubber elastomer (TPR)

Wheel Center: Made of high-quality impact-resistant polypropylene

Drawings are for reference only and may differ from the product

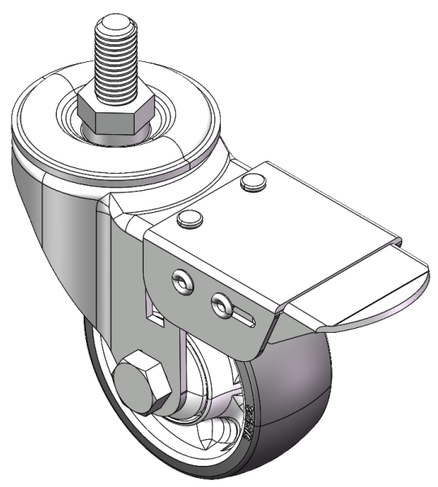

Picture may differ from original product

Technical Data

◉ Metric ○ Imperial

Wheel Diameter	75mm
Wheel Width	31mm
Wheel Bearing	Wheels With Ball Bearings
Threaded Stem	M16-P2.0
Threaded Size	25mm
Offset	38mm
Swivel Interference	230mm
Overall Height	105.5mm
Swivel Radius	115mm
Hardness Of Tread	72±5° Shore A
Load Capacity (Dynamic)	110kgs
Load Capacity (Static)	165kgs
Temperature	-20°C to +60°C
Fork Type	Swivel Caster With Total Brake
Stainless	N/A
Electrical Conductivity	N/A
Anti-Static	N/A
Weight	0.68kgs
Standard	ISO22883

Advantages at a glance

Rolling Resistance	● ● ● ● ●
Operating Noise	● ● ● ● ●
Floor Surface Preservation	● ● ● ● ●

Dimensions

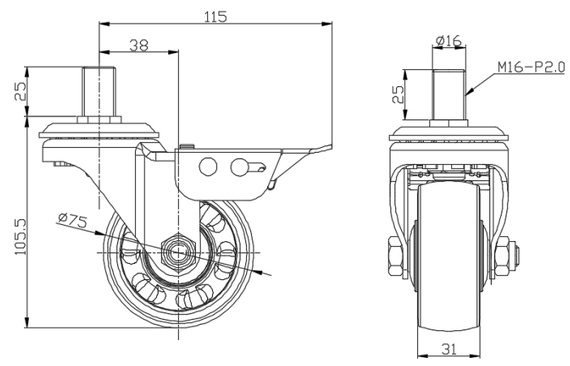

Mounting

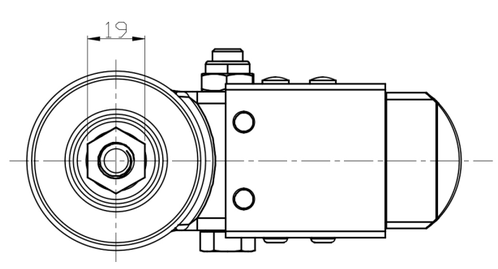

* For any deviation between metric and imperial spec, please refer to the metric spec.

© Copyright 2025 DershengInternational www.dersheng.com