1124 1-1/2" Wide General Purposes Caster Series

PU (Red Flat) Wheel Diameter × Wheel Width 150 × 42 mm

EAN

YJ-11240600334013

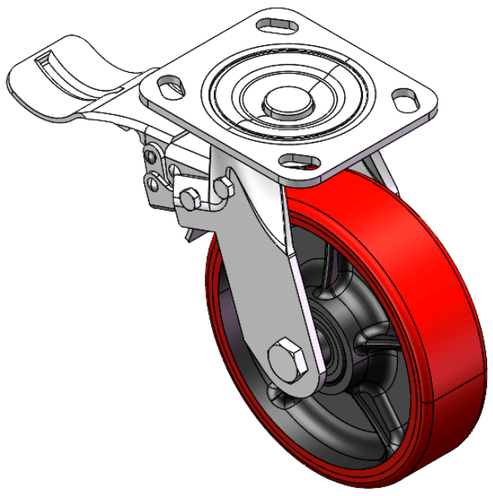

Picture may differ from original product

Drawings are for reference only and may differ from the product

Technical Data

◉ Metric ○ Imperial

Wheel Diameter	150mm
Wheel Width	42mm
Wheel Bearing	Wheels With Ball Bearings
Plate Size	115 x 100mm
Bolt Hole Spacing	85 x 70mm
Plate Hole	20 x 11mm
Offset	39mm
Swivel Interference	334mm
Overall Height	189mm
Swivel Radius	167mm
Hardness Of Tread	93±5° Shore A
Load Capacity (Dynamic)	600kgs
Load Capacity (Static)	900kgs
Temperature	-20°C to +70°C
Fork Type	Swivel Caster With Rear Brake
Stainless	N/A
Electrical Conductivity	N/A
Anti-Static	N/A
Weight	3.39kgs
Standard	ISO22883

Advantages at a glance

Rolling Resistance	●●●○○
Operating Noise	●●●●○
Floor Surface Preservation	●●●●○

Dimensions

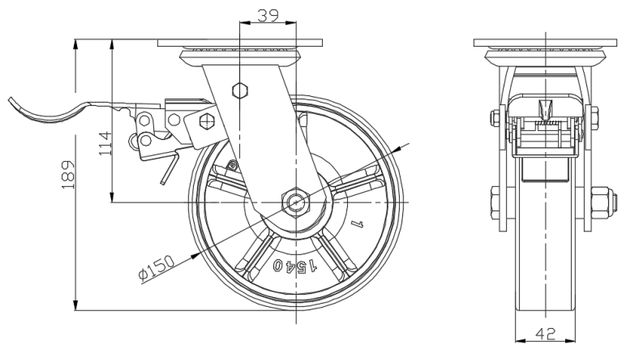

Mounting

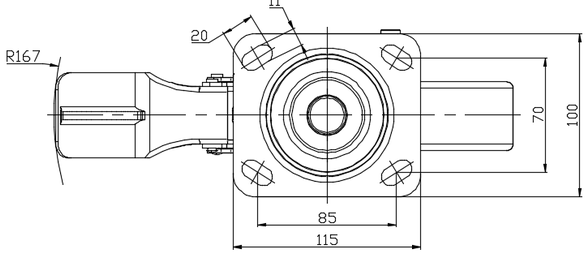

* For any deviation between metric and imperial spec, please refer to the metric spec.

© Copyright 2026 DershengInternational www.dersheng.com