Product Information Sheet

1121 Double Raceway, Light Duty Caster Series

Rubber Wheel (Diameter × Width 40×17mm)

EAN

YJ-11210150065093

Portable Casters, Threaded Stem Stamping Fork—3/8"-16 teeth
Zine-Plated surface, Mounting Type - Threaded Stem device
Reinforced Polypropylene, High-Quality Resilient Rubber Wheel Tread
Black, wheels—Plain Bearing.

Wheel surface: High-quality elastic rubber
Wheel Center: Thermoplastic (PA6)

Drawings are for reference only and may differ from the product

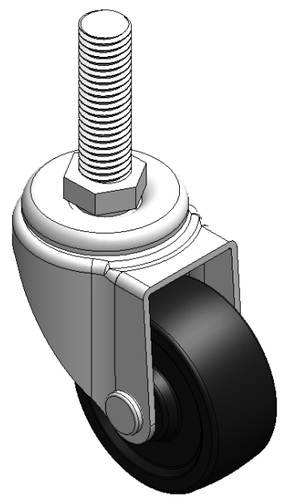

Picture may differ from original product

Technical Data

◉ Metric ○ Imperial

Wheel Diameter	40mm
Wheel Width	17mm
Wheel Bearing	Wheel With Plain Bearing
Threaded Stem	3/8 " -16牙
Threaded Length	34mm
Offset	18.5mm
Swivel Interference	77mm
Overall Height	60mm
Swivel Radius	38.5mm
Hardness Of Tread	80±5° Shore A
Load Capacity (Dynamic)	20kgs
Load Capacity (Static)	30kgs
Temperature	-20°C to +120°C
Fork Type	Swivel Caster
Stainless	N/A
Electrical Conductivity	N/A
Anti-Static	N/A
Weight	0.13kgs
Standard	ISO22883

Advantages at a glance

Rolling Resistance	● ● ● ○ ○
Operating Noise	● ● ● ● ○
Floor Surface Preservation	● ● ● ● ○

Dimensions

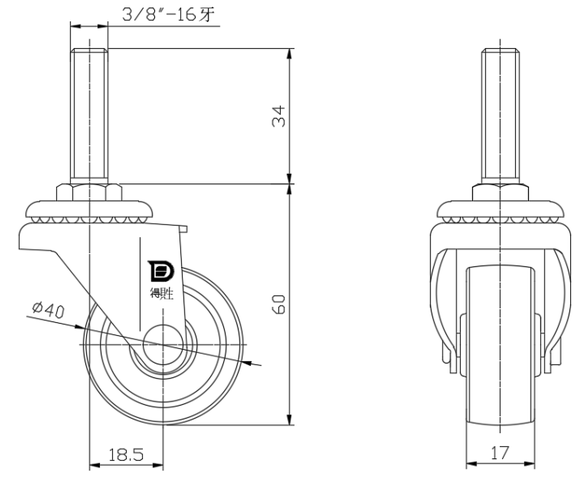

Mounting

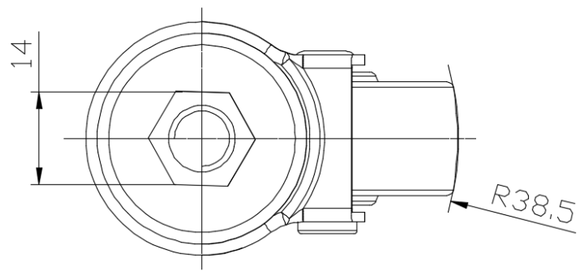

* For any deviation between metric and imperial spec, please refer to the metric spec.

© Copyright 2026 DershengInternational www.dersheng.com