1110-YOYO YOYO Series-Light Duty Twin Wheel Caster Series　(All Plastic)

Yoyo Wheel (black dark gray) Wheel Diameter x Wheel Width 100 x 22mm

EAN

YJ-11100400246123

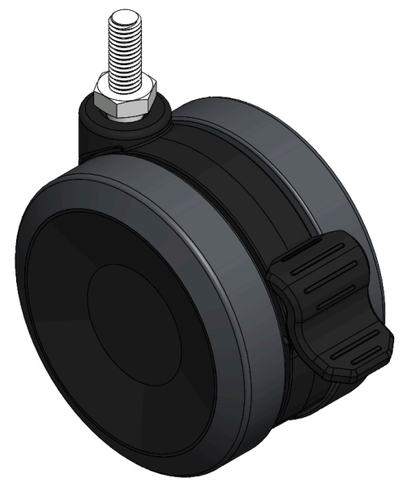

Drawings are for reference only and may differ from the product

Picture may differ from original product

Technical Data

◉ Imperial ○ Metric

Wheel Diameter	4 "
Wheel Width	2-3/4 "
Wheel Bearing	Wheels With Ball Bearings
Threaded Stem	3/8 " -16
Threaded Length	1 "
Offset	1-5/16 "
Swivel Interference	8-1/2 "
Overall Height	4-5/16 "
Swivel Radius	4-1/4 "
Hardness Of Tread	95±5° Shore A
Load Capacity (Dynamic)	220lbs
Load Capacity (Static)	331lbs
Temperature	-4°F to +140°F
Fork Type	Swivel Caster With Wheel Brake
Stainless	N/A
Electrical Conductivity	N/A
Anti-Static	N/A
Weight	1.1lbs
Standard	ISO22883

Advantages at a glance

Rolling Resistance	●●●●●
Operating Noise	●●●●●
Floor Surface Preservation	●●●●●

Dimensions

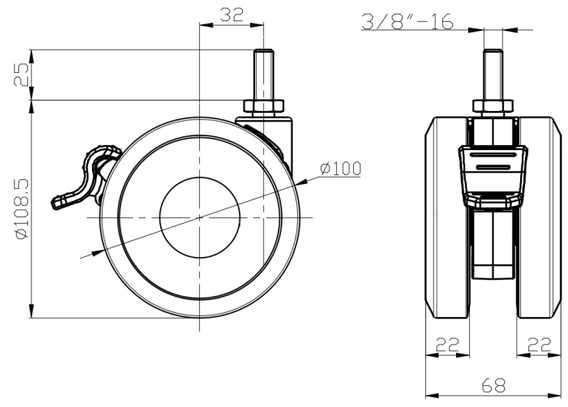

Mounting

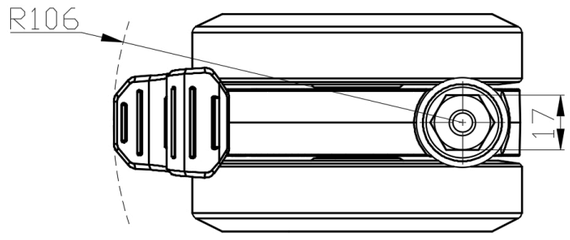

* For any deviation between metric and imperial spec, please refer to the metric spec.

© Copyright 2026 DershengInternational www.dersheng.com