1110-YOYO YOYO Series-Light Duty Twin Wheel Caster Series　(All Plastic)

Yoyo Wheel (black dark gray) Wheel Diameter x Wheel Width 100 x 22mm

EAN

YJ-11100400246123

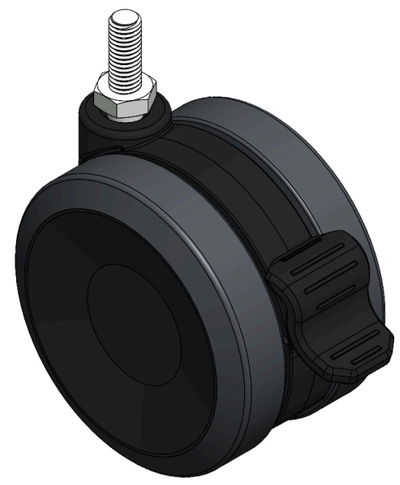

Picture may differ from original product

Drawings are for reference only and may differ from the product

Technical Data

◉ Metric ○ Imperial

Wheel Diameter	100mm
Wheel Width	68mm
Wheel Bearing	Wheels With Ball Bearings
Threaded Stem	3/8 " -16
Threaded Length	25mm
Offset	32mm
Swivel Interference	212mm
Overall Height	108.5mm
Swivel Radius	106mm
Hardness Of Tread	95±5° Shore A
Load Capacity (Dynamic)	100kgs
Load Capacity (Static)	150kgs
Temperature	-20°C to +60°C
Fork Type	Swivel Caster With Wheel Brake
Stainless	N/A
Electrical Conductivity	N/A
Anti-Static	N/A
Weight	0.51kgs
Standard	ISO22883

Advantages at a glance

Rolling Resistance	●●●●●
Operating Noise	●●●●●
Floor Surface Preservation	●●●●●

Dimensions

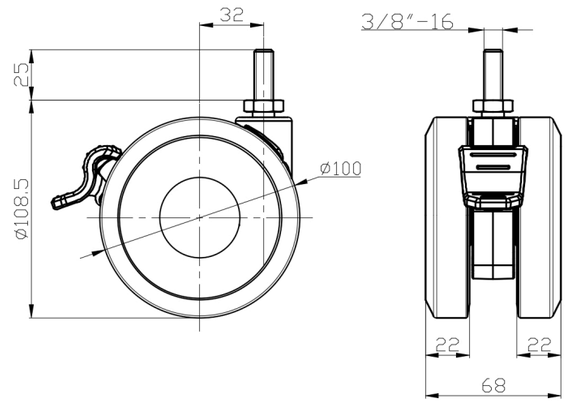

Mounting

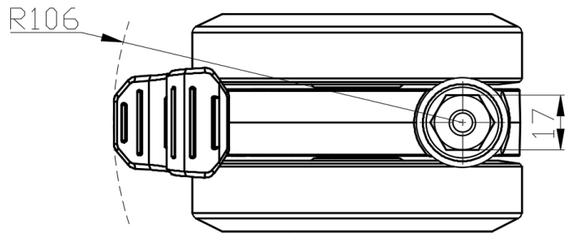

* For any deviation between metric and imperial spec, please refer to the metric spec.

© Copyright 2026 DershengInternational www.dersheng.com