Product Information Sheet

1153-1 Heavy Duty 2" Wide General Purposes Caster (European Style) Series

Rubber Wheel Diameter × Wheel Width 150 x 40mm

EAN

TW-4115306001038 KS-11111

YJ-11111 VN-11111

Rigid Casters, Stamping Fabricated Caster Fork Zine-Plated surface, plate Mounting Type, iron core tube High-Quality Impact-Resistant Polypropylene Wheel Center, High-Quality Resilient Rubber Wheel Tread Black, Plain Bearings.

Wheel surface: High-quality elastic rubber

Wheel Center: Made of high-quality impact-resistant polypropylene

Drawings are for reference only and may differ from the product

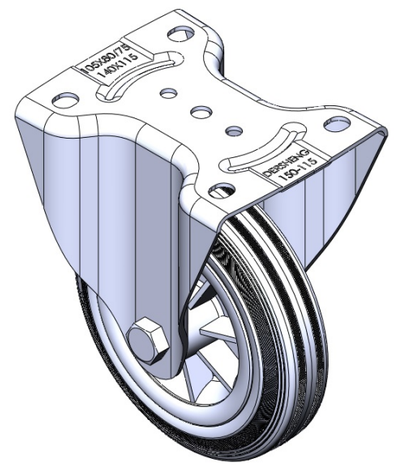

Picture may differ from original product

Technical Data

◉ Imperial ○ Metric

Wheel Diameter	6 "
Wheel Width	1-5/8 "
Wheel Bearing	Wheel With Plain Bearing
Plate Size	5-9/16 " x 4-9/16 "
Bolt Hole Spacing	4-3/16 " x 3-1/16 "
Plate Hole	9/16 " x 3/8 "
Overall Height	7-1/2 "
Hardness Of Tread	80±5° Shore A
Load Capacity (Dynamic)	276lbs
Load Capacity (Static)	413lbs
Temperature	-4°F to +248°F
Fork Type	Rigid Caster
Stainless	N/A
Electrical Conductivity	N/A
Anti-Static	N/A
Weight	3.3lbs
Standard	ISO22883

Advantages at a glance

Rolling Resistance	● ● ● ○ ○
Operating Noise	● ● ● ● ○
Floor Surface Preservation	● ● ● ● ○

Dimensions

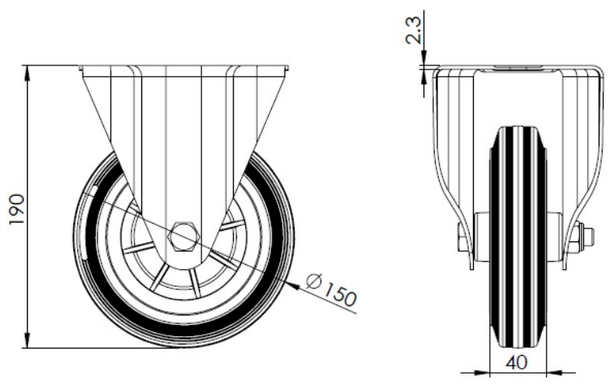

Mounting

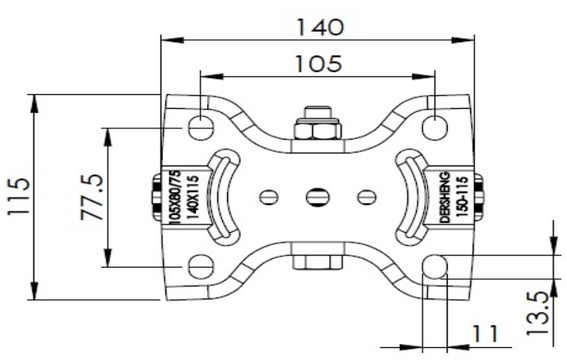

* For any deviation between metric and imperial spec, please refer to the metric spec.

© Copyright 2025 DershengInternational www.dersheng.com