Product Information Sheet

1153-1 Heavy Duty 2" Wide General Purposes Caster (European Style) Series

Rubber Wheel Diameter × Wheel Width 150 x 40mm

EAN

TW-4115306001038 KS-11111

YJ-11111 VN-11111

Rigid Casters, Stamping Fabricated Caster Fork Zine-Plated surface, plate Mounting Type, iron core tube High-Quality Impact-Resistant Polypropylene Wheel Center, High-Quality Resilient Rubber Wheel Tread Black, Plain Bearings.

Wheel surface: High-quality elastic rubber

Wheel Center: Made of high-quality impact-resistant polypropylene

Drawings are for reference only and may differ from the product

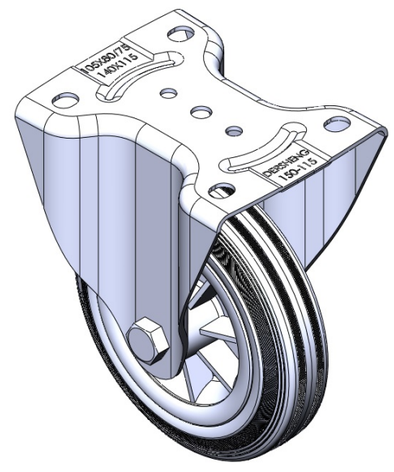

Picture may differ from original product

Technical Data

◉ Metric ○ Imperial

Wheel Diameter	150mm
Wheel Width	40mm
Wheel Bearing	Wheel With Plain Bearing
Plate Size	140 x 115mm
Bolt Hole Spacing	105 x 77.5mm
Plate Hole	13.5 x 11mm
Overall Height	190mm
Hardness Of Tread	80±5° Shore A
Load Capacity (Dynamic)	125kgs
Load Capacity (Static)	187.5kgs
Temperature	-20°C to +120°C
Fork Type	Rigid Caster
Stainless	N/A
Electrical Conductivity	N/A
Anti-Static	N/A
Weight	1.50kgs
Standard	ISO22883

Advantages at a glance

Rolling Resistance	● ● ● ○ ○
Operating Noise	● ● ● ● ○
Floor Surface Preservation	● ● ● ● ○

Dimensions

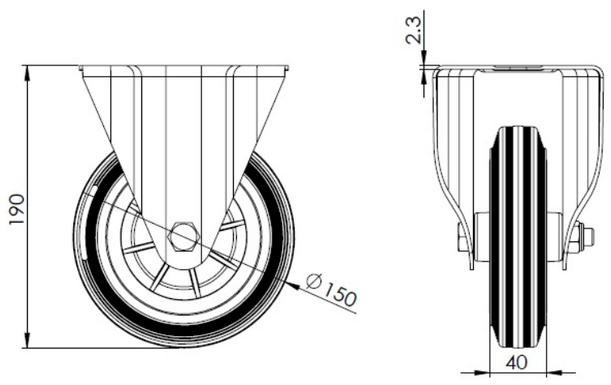

Mounting

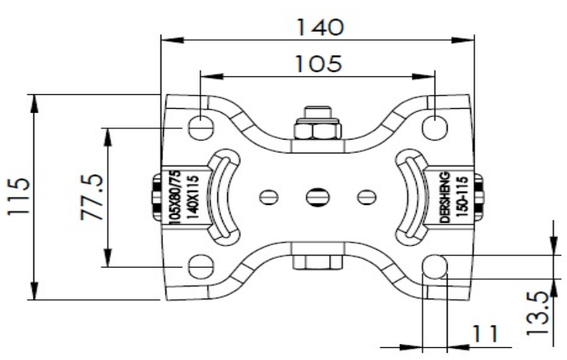

* For any deviation between metric and imperial spec, please refer to the metric spec.

© Copyright 2025 DershengInternational www.dersheng.com