Product Data Sheet

1130 Medium Duty General Purposes Caster Series

PPR (red) Wheel Diameter × Wheel Width 75 x 31mm

EAN

TW-4113003004106

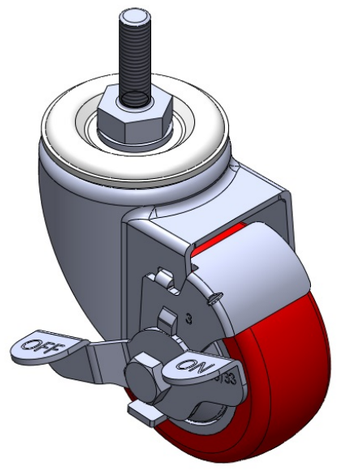

Picture may differ from original product

Casters with Side Brakes and With locking system. Threaded Stem Riveted Pressed Fork – 3/8-16 threads.
Zine-Plated, Mounting Type - Threaded Stem.
High-Quality Impact-Resistant Polypropylene Wheel Center, High-Quality Reinforced Polypropylene Rubber (TPR) Wheel Tread.
Red color, Bearing – Ball Bearing.

Wheel tread: Thermoplastic rubber elastomer (TPR)

Wheel Center: Made of high-quality impact-resistant polypropylene

Drawings are for reference only and may differ from the product

Technical Data

◉ Imperial ○ Metric

Wheel Diameter	3 "
Wheel Width	1-1/4 "
Wheel Bearing	Wheels With Ball Bearings
Threaded Stem	3/8 " -16牙
Threaded Size	1-5/16 "
Offset	1-3/8 "
Swivel Interference	6 "
Overall Height	4-5/16 "
Swivel Radius	3 "
Hardness Of Tread	82±5° Shore A
Load Capacity (Dynamic)	154lbs
Load Capacity (Static)	231lbs
Temperature	-4°F to +140°F
Fork Type	Swivel Caster With Side Brake
Stainless	N/A
Electrical Conductivity	N/A
Anti-Static	N/A
Weight	1.3lbs
Standard	ISO22883

Advantages at a glance

Rolling Resistance	● ● ● ● ○
Operating Noise	● ● ● ● ○
Floor Surface Preservation	● ● ● ● ●

Dimensions

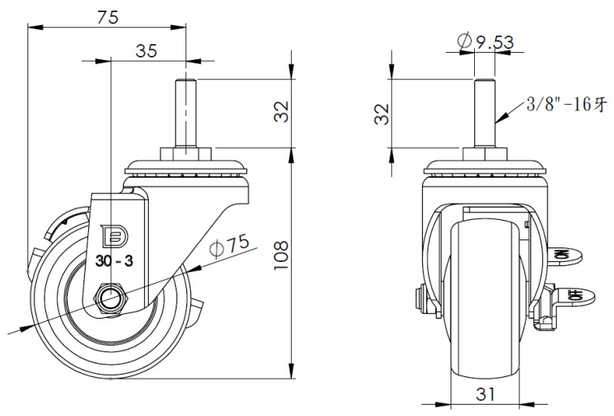

Mounting

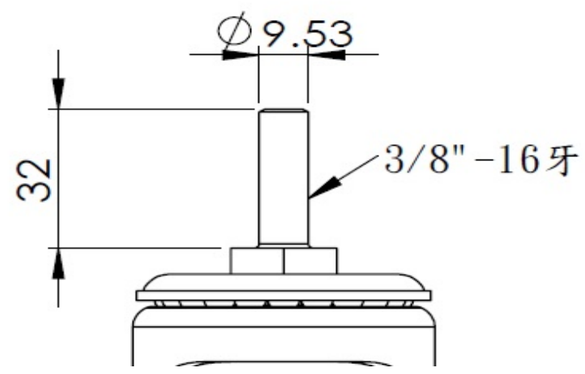

* For any deviation between metric and imperial spec, please refer to the metric spec.

© Copyright 2025 DershengInternational www.dersheng.com