Product Data Sheet

1130 Medium Duty General Purposes Caster Series

PU Wheel Diameter × Wheel Width 75 x 32mm

EAN

TW-4113003002040

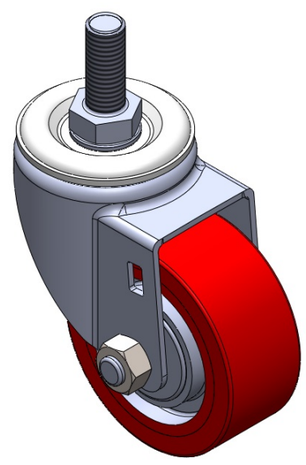

Picture may differ from original product

Portable Casters, Threaded Stem Stamping Fork—1/2-12 teeth
Zine-Plated surface, Mounting Type - Top Plate device
Cast Iron Wheel Center, High Quality Polyurethane Wheel Tread
Cast Iron red, Bearing—Ball Bearings.

Wheel surface: High-quality polyurethane

Wheel Center: Iron core / Cast iron core

Drawings are for reference only and may differ from the product

Technical Data

◉ Imperial ○ Metric

Wheel Diameter	3 "
Wheel Width	1-5/16 "
Wheel Bearing	Wheels With Ball Bearings
Threaded Stem	1/2 " -12牙
Threaded Length	1-5/16 "
Offset	1-3/8 "
Swivel Interference	5-13/16 "
Overall Height	4-5/16 "
Swivel Radius	2-15/16 "
Hardness Of Tread	93±5° Shore A
Load Capacity (Dynamic)	220lbs
Load Capacity (Static)	529lbs
Temperature	-4°F to +158°F
Fork Type	Swivel Caster
Stainless	N/A
Electrical Conductivity	N/A
Anti-Static	N/A
Weight	1.1lbs
Standard	ISO22883

Advantages at a glance

Rolling Resistance	● ● ● ○ ○
Operating Noise	● ● ● ● ○
Floor Surface Preservation	● ● ● ● ○

Dimensions

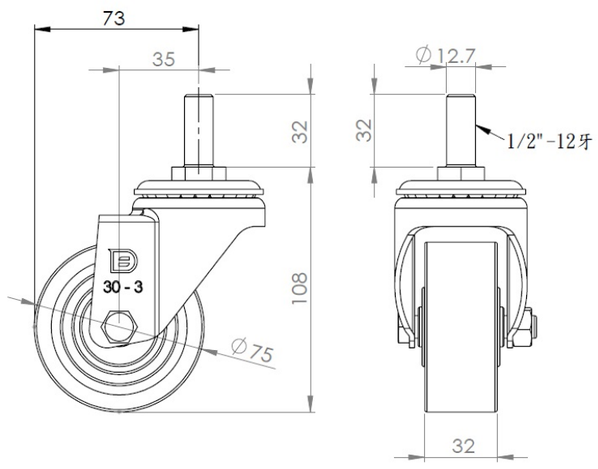

Mounting

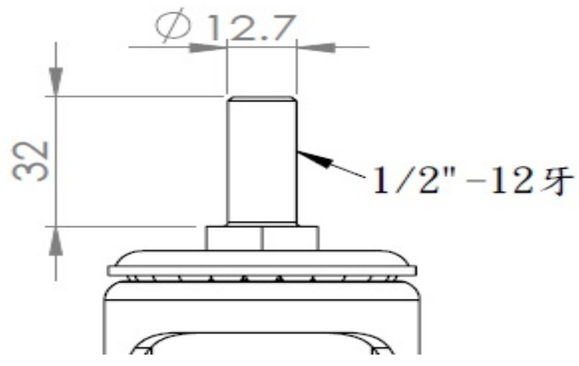

* For any deviation between metric and imperial spec, please refer to the metric spec.

© Copyright 2025 DershengInternational www.dersheng.com