Product Data Sheet

1130 Medium Duty General Purposes Caster Series

AQPU (blue) Wheel Diameter × Wheel Width 75 x 31mm

EAN

TW-4113003002024

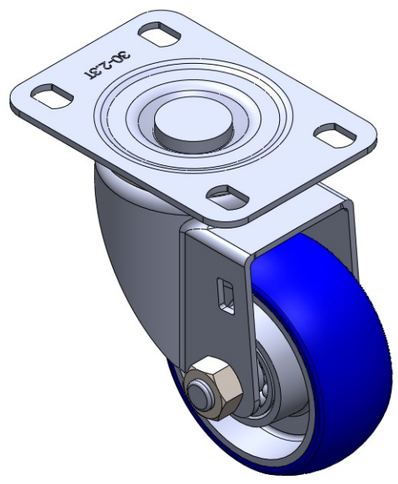

Picture may differ from original product

Swivel Caster with Riveted Fork and Stamping Fork – 75 x 45 mm (3" x 1-3/4") Bolt Hole Spacing Zine-Plated, Mounting Type - Top Plate Aluminum core with High Quality Polyurethane Wheel Tread Blue color, Bearing – Ball Bearings

Wheel tread: high quality polyurethane

Wheel Center: aluminum core

Drawings are for reference only and may differ from the product

Technical Data

◉ Metric ○ Imperial

Wheel Diameter	75mm
Wheel Width	31mm
Wheel Bearing	Wheels With Ball Bearings
Plate Size	96 x 69mm
Bolt Hole Spacing	75X45mm
Plate Hole	13 x 9mm
Offset	35mm
Swivel Interference	146mm
Overall Height	106mm
Swivel Radius	73mm
Hardness Of Tread	87±5° Shore A
Load Capacity (Dynamic)	160kgs
Load Capacity (Static)	240kgs
Temperature	-20°C to +70°C
Fork Type	Swivel Caster
Stainless	N/A
Electrical Conductivity	N/A
Anti-Static	N/A
Weight	0.60kgs
Standard	ISO22883

Advantages at a glance

Rolling Resistance	● ● ● ● ●
Operating Noise	● ● ● ● ●
Floor Surface Preservation	● ● ● ● ●

Dimensions

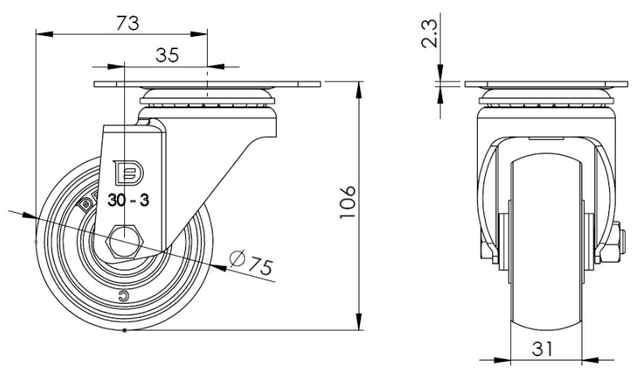

Mounting

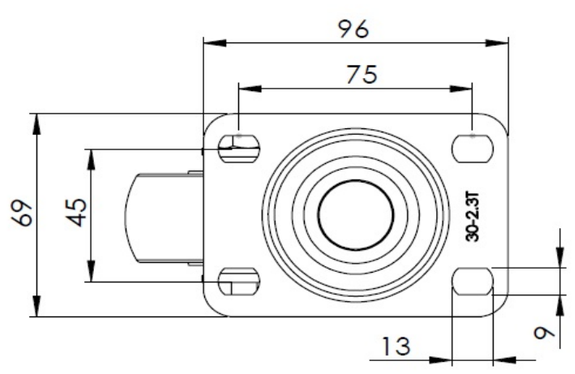

* For any deviation between metric and imperial spec, please refer to the metric spec.

© Copyright 2025 DershengInternational www.dersheng.com