Product Data Sheet

1130 Medium Duty General Purposes Caster Series

PU Wheel Diameter × Wheel Width 75 x 32mm

EAN

TW-4113003001028

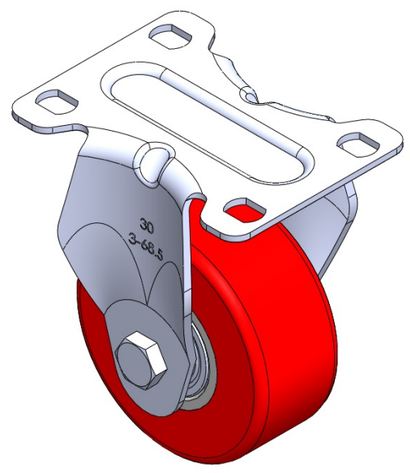

Picture may differ from original product

Rigid Caster with Stamping Fabricated Caster Fork and 75 x 45 mm (3" x 1-3/4") Bolt Hole Spacing. Zine-Plated, Mounting Type - Top Plate, chrome plated. Cast Iron core with High Quality Polyurethane Wheel Tread. Red Cast Iron finish. Bearings: Ball Bearings.

Wheel tread: high quality polyurethane

Wheel Center: iron core/cast iron core

Drawings are for reference only and may differ from the product

Technical Data

◉ Metric ○ Imperial

Wheel Diameter	75mm
Wheel Width	32mm
Wheel Bearing	Wheels With Ball Bearings
Plate Size	92 x 70mm
Bolt Hole Spacing	75X45mm
Plate Hole	12 x 9mm
Overall Height	106mm
Hardness Of Tread	93±5° Shore A
Load Capacity (Dynamic)	180kgs
Load Capacity (Static)	270kgs
Temperature	-20°C to +70°C
Fork Type	Rigid Caster
Stainless	N/A
Electrical Conductivity	N/A
Anti-Static	N/A
Weight	0.40kgs
Standard	ISO22883

Advantages at a glance

Rolling Resistance	● ● ● ○ ○
Operating Noise	● ● ● ● ○
Floor Surface Preservation	● ● ● ● ○

Dimensions

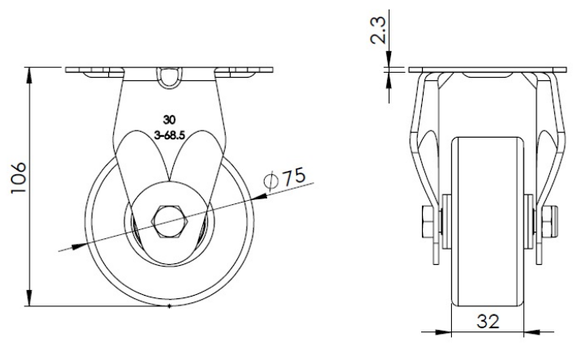

Mounting

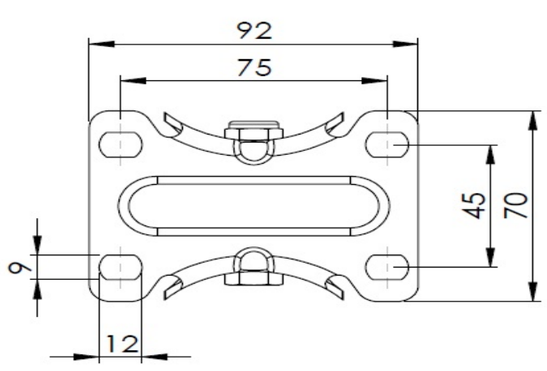

* For any deviation between metric and imperial spec, please refer to the metric spec.

© Copyright 2025 DershengInternational www.dersheng.com