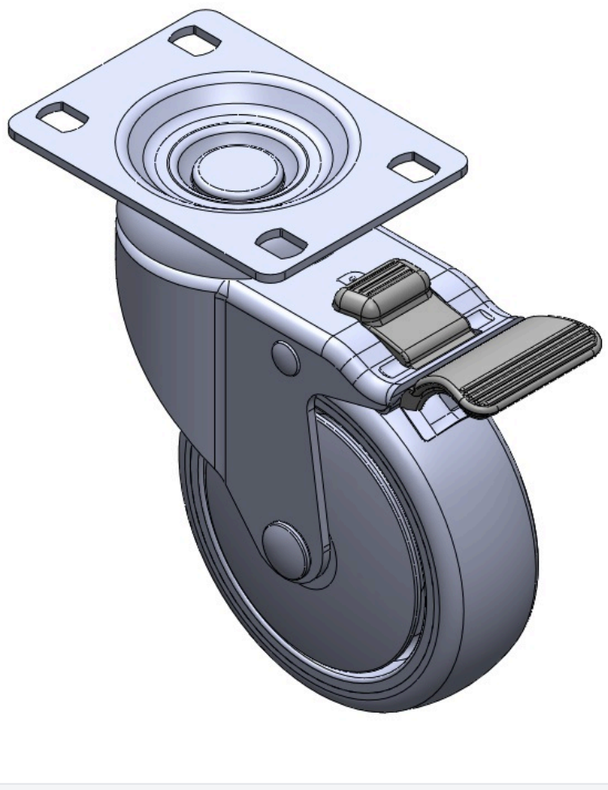

Picture may differ from original product



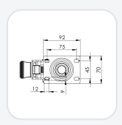

1116-SS-MI Medium Duty Institutional Stainless Steel Caster Series

PPR Wheel Diameter × Wheel Width 100 x 31mm

TW-4111604004060 Copy model no.

Wheel Diameter	Load Capacity (Dynamic)	Overall Height	Wheel Bearing
100mm	**100kgs**	**137mm**	**Wheels With Ball Bearings**

Product descriptions are for reference only. The actual product shall prevail.

Product Data Sheet

Wheel Diameter	**100mm**	Wheel Width	**31mm**
Wheel Bearing	**Wheels With Ball Bearings**	Plate Size	**92 x 70mm**
Bolt Hole Spacing	**75 x 45mm**	Plate Hole	**12 x 9mm**
Offset	**41mm**	Swivel Interference	**210mm**
Overall Height	**137mm**	Swivel Radius	**105mm**
Hardness Of Tread	**82±5° Shore A**	Load Capacity (Dynamic)	**100kgs**
Load Capacity (Static)	**150kgs**	Temperature	**-20°C to +60°C**
Fork Type	**Swivel Caster With Total Brake**	Stainless	**Y**
Electrical Conductivity	**N/A**	Anti-Static	**N/A**
Weight	**0.85kgs**	Standard	**ISO22883**

* For any deviation between metric and imperial spec, please refer to the metric spec.

Performance

Rolling Resistance ●●●●○	Operating Noise ●●●●○	Floor Surface Preservation ●●●●●

© 2026 DERSHENG CO., LTD. All rights reserved.