Product Information Sheet

1116-SS-MI Medium Duty Institutional Stainless Steel Caster Series

Resolute Wheel Diameter × Wheel Width 75 x 31mm

EAN

TW-4111603004059

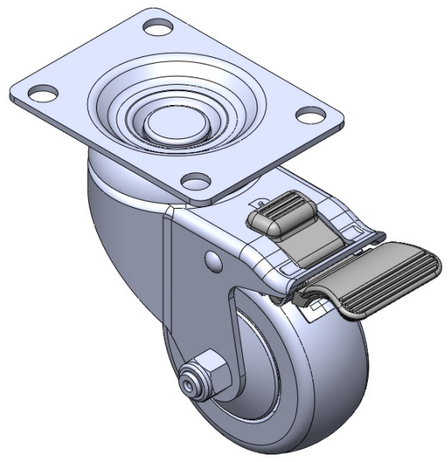

Picture may differ from original product

Equipped with double-brake locking Casters. Riveted and Stamping Top Plate with 72 x 53.5 mm (2-7/8" x 2-1/8") Bolt Hole Spacing. Surface vibration, Mounting Type - Top Plate device. High-Quality Impact-Resistant Polypropylene Wheel Center, High-Quality Reinforced Polypropylene Rubber (TPR) Wheel Tread. Gray Bearing—Ball Bearings.

Wheel tread: Thermoplastic rubber elastomer (TPR)

Wheel Center: Made of high-quality impact-resistant polypropylene

Drawings are for reference only and may differ from the product

Technical Data

◉ Imperial ○ Metric

Wheel Diameter	3 "
Wheel Width	1-1/4 "
Wheel Bearing	Wheels With Ball Bearings
Plate Size	3-5/8 " x 2-13/16 "
Bolt Hole Spacing	2-7/8 " x 2-1/8 "
Plate Hole	3/8 "
Offset	1-11/16 "
Swivel Interference	8-1/2 "
Overall Height	4-1/2 "
Swivel Radius	4-1/4 "
Hardness Of Tread	72±5° Shore A
Load Capacity (Dynamic)	198lbs
Load Capacity (Static)	298lbs
Temperature	-4°F to +140°F
Fork Type	Swivel Caster With Total Brake
Stainless	Y
Electrical Conductivity	N/A
Anti-Static	N/A
Weight	1.7lbs
Standard	ISO22883

Advantages at a glance

Rolling Resistance	● ● ● ● ●
Operating Noise	● ● ● ● ●
Floor Surface Preservation	● ● ● ● ●

Dimensions

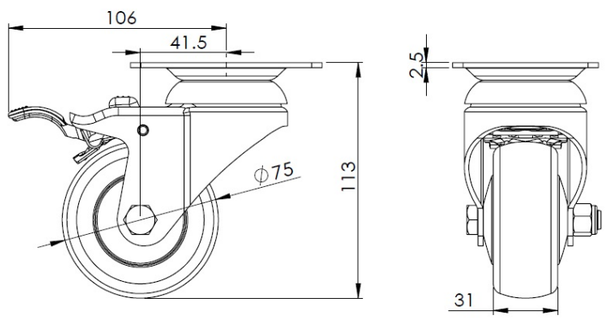

Mounting

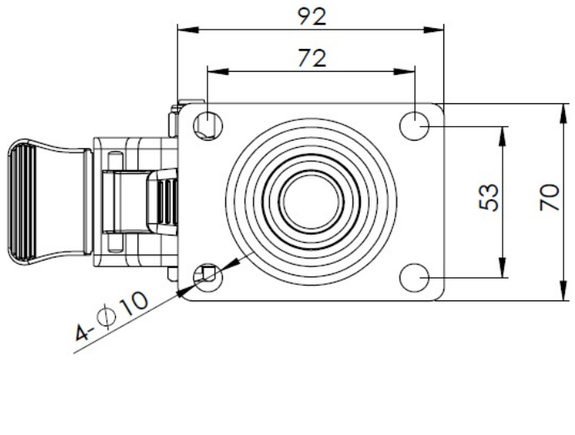

* For any deviation between metric and imperial spec, please refer to the metric spec.

© Copyright 2026 DershengInternational www.dersheng.com