Product Information Sheet

1116-SS-MI Medium Duty Institutional Stainless Steel Caster Series

Resolute Wheel Diameter × Wheel Width 75 x 31mm

EAN

TW-4111603004059

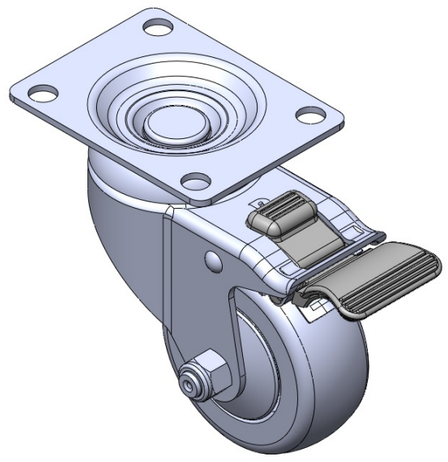

Picture may differ from original product

Equipped with double-brake locking Casters. Riveted and Stamping Top Plate with 72 x 53.5 mm (2-7/8" x 2-1/8") Bolt Hole Spacing. Surface vibration, Mounting Type - Top Plate device. High-Quality Impact-Resistant Polypropylene Wheel Center, High-Quality Reinforced Polypropylene Rubber (TPR) Wheel Tread. Gray Bearing—Ball Bearings.

Wheel tread: Thermoplastic rubber elastomer (TPR)

Wheel Center: Made of high-quality impact-resistant polypropylene

Drawings are for reference only and may differ from the product

Technical Data

◉ Metric ○ Imperial

Wheel Diameter	75mm
Wheel Width	31mm
Wheel Bearing	Wheels With Ball Bearings
Plate Size	92 x 70mm
Bolt Hole Spacing	72 x 53mm
Plate Hole	10mm
Offset	41.5mm
Swivel Interference	212mm
Overall Height	113mm
Swivel Radius	106mm
Hardness Of Tread	72±5° Shore A
Load Capacity (Dynamic)	90kgs
Load Capacity (Static)	135kgs
Temperature	-20°C to +60°C
Fork Type	Swivel Caster With Total Brake
Stainless	Y
Electrical Conductivity	N/A
Anti-Static	N/A
Weight	0.75kgs
Standard	ISO22883

Advantages at a glance

Rolling Resistance	● ● ● ● ●
Operating Noise	● ● ● ● ●
Floor Surface Preservation	● ● ● ● ●

Dimensions

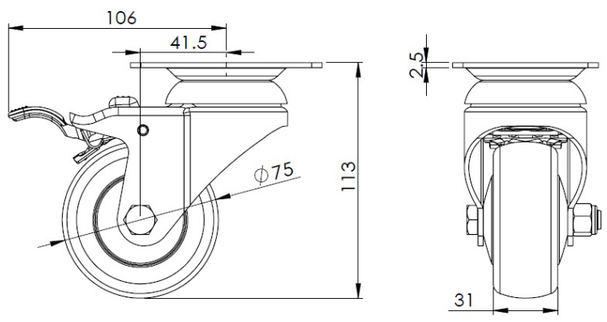

Mounting

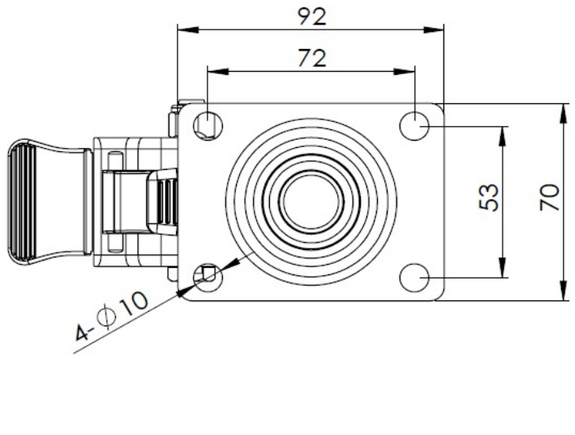

* For any deviation between metric and imperial spec, please refer to the metric spec.

© Copyright 2026 DershengInternational www.dersheng.com