Product Information Sheet

1116-SS-MI Medium Duty Institutional Stainless Steel Caster Series

Nylon Wheel Diameter × Wheel Width 75 x 32mm

EAN

TW-4111603004041

Equipped with double-brake locking Casters. Riveted and Stamping Top Plate legs with high-grade perforations. Surface vibration, Mounting Type - Top Plate. Reinforced Polypropylene Wheel Center and rim. White, Plain Bearings.

Wheel surface: thermoplastic

Wheel Center: thermoplastic

Drawings are for reference only and may differ from the product

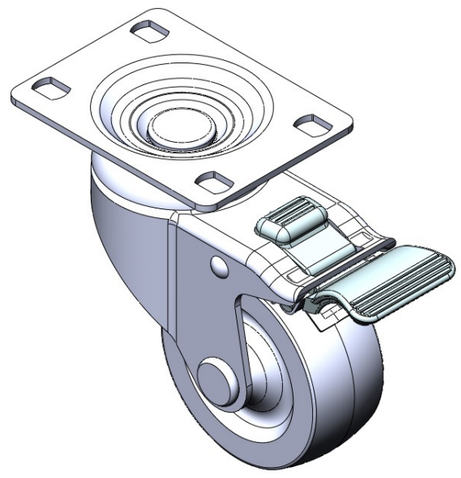

Picture may differ from original product

Technical Data

◉ Imperial ○ Metric

Wheel Diameter	3 "
Wheel Width	1-5/16 "
Wheel Bearing	Wheel With Plain Bearing
Plate Size	3-5/8 " x 2-13/16 "
Bolt Hole Spacing	3 " x 1-13/16 "
Plate Hole	1/2 " x 23/64 "
Offset	1-11/16 "
Swivel Interference	8-1/2 "
Overall Height	4-1/2 "
Swivel Radius	4-1/4 "
Hardness Of Tread	75±5° Shore D
Load Capacity (Dynamic)	220lbs
Load Capacity (Static)	331lbs
Temperature	-4°F to +176°F
Fork Type	Swivel Caster With Total Brake
Stainless	Y
Electrical Conductivity	N/A
Anti-Static	N/A
Weight	1.7lbs
Standard	ISO22883

Advantages at a glance

Rolling Resistance	● ● ● ● ●
Operating Noise	● ● ○ ○ ○
Floor Surface Preservation	● ● ○ ○ ○

Dimensions

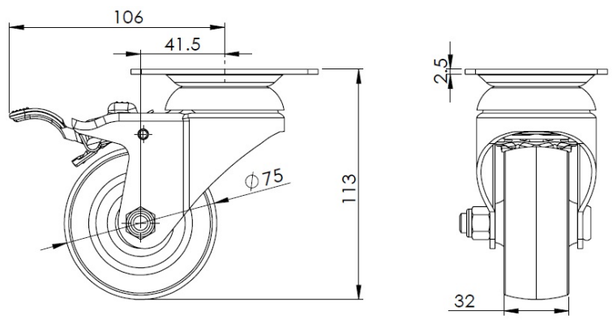

Mounting

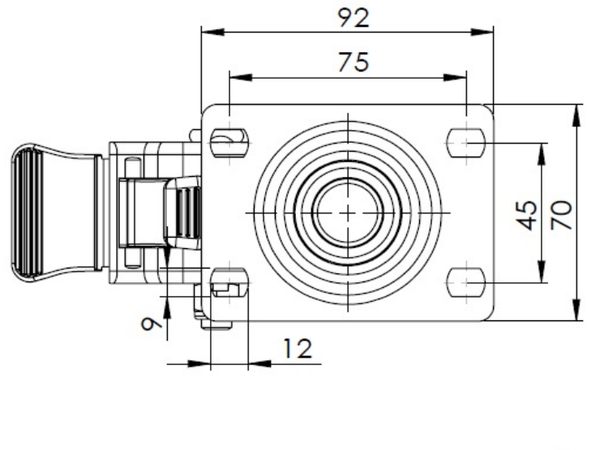

* For any deviation between metric and imperial spec, please refer to the metric spec.

© Copyright 2026 DershengInternational www.dersheng.com