Product Information Sheet

1116-SS-MI Medium Duty Institutional Stainless Steel Caster Series

Nylon Wheel Diameter × Wheel Width 75 x 32mm

EAN

TW-4111603004041

Equipped with double-brake locking Casters. Riveted and Stamping Top Plate legs with high-grade perforations. Surface vibration, Mounting Type - Top Plate. Reinforced Polypropylene Wheel Center and rim. White, Plain Bearings.

Wheel surface: thermoplastic

Wheel Center: thermoplastic

Drawings are for reference only and may differ from the product

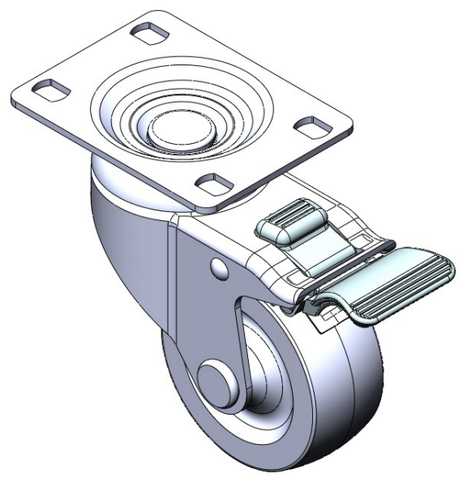

Picture may differ from original product

Technical Data

◉ Metric ○ Imperial

Wheel Diameter	75mm
Wheel Width	32mm
Wheel Bearing	Wheel With Plain Bearing
Plate Size	92 x 70mm
Bolt Hole Spacing	75 x 45mm
Plate Hole	12 x 9mm
Offset	41.5mm
Swivel Interference	212mm
Overall Height	113mm
Swivel Radius	106mm
Hardness Of Tread	75±5° Shore D
Load Capacity (Dynamic)	100kgs
Load Capacity (Static)	150kgs
Temperature	-20°C to +80°C
Fork Type	Swivel Caster With Total Brake
Stainless	Y
Electrical Conductivity	N/A
Anti-Static	N/A
Weight	0.75kgs
Standard	ISO22883

Advantages at a glance

Rolling Resistance	● ● ● ● ●
Operating Noise	● ● ○ ○ ○
Floor Surface Preservation	● ● ○ ○ ○

Dimensions

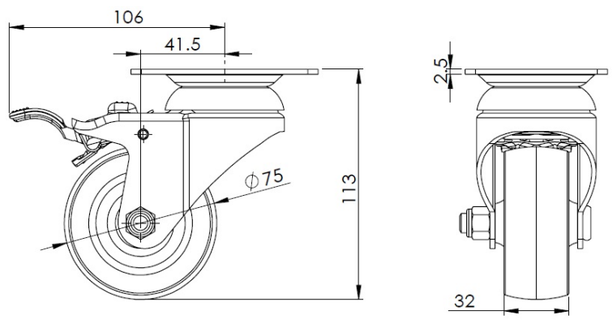

Mounting

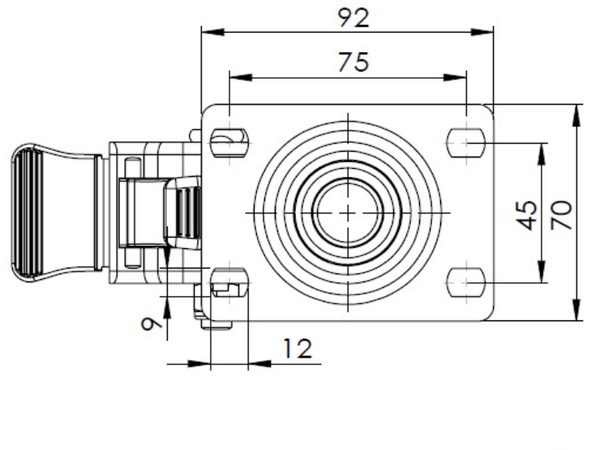

* For any deviation between metric and imperial spec, please refer to the metric spec.

© Copyright 2026 DershengInternational www.dersheng.com