Product Information Sheet

1116-SS-MI Medium Duty Institutional Stainless Steel Caster Series

Nylon Wheel Diameter × Wheel Width 75 x 31mm

EAN

TW-4111603004007

Equipped with double-brake With locking system Casters. Stamping feet with Riveted cores—1/2"-12 teeth. Surface vibration resistant, Mounting Type - Threaded Stem. Reinforced Polypropylene Wheel Center and rim. White, Plain Bearings.

Wheel surface: thermoplastic

Wheel Center: thermoplastic

Drawings are for reference only and may differ from the product

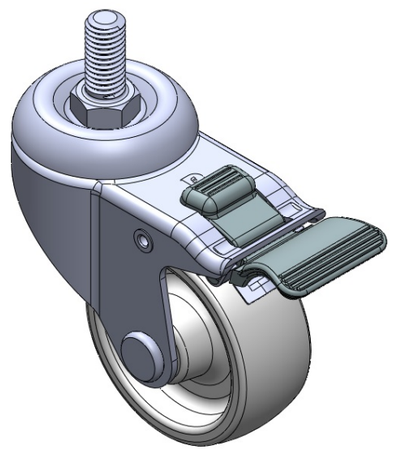

Picture may differ from original product

Technical Data

◉ Metric ○ Imperial

Wheel Diameter	75mm
Wheel Width	31mm
Wheel Bearing	Wheel With Plain Bearing
Threaded Stem	1/2 " -12牙
Threaded Length	28mm
Offset	41.5mm
Swivel Interference	212mm
Overall Height	109mm
Swivel Radius	106mm
Hardness Of Tread	75±5° Shore D
Load Capacity (Dynamic)	100kgs
Load Capacity (Static)	150kgs
Temperature	-20°C to +80°C
Fork Type	Swivel Caster With Total Brake
Stainless	Y
Electrical Conductivity	N/A
Anti-Static	N/A
Weight	0.65kgs
Standard	ISO22883

Advantages at a glance

Rolling Resistance	● ● ● ● ●
Operating Noise	● ● ○ ○ ○
Floor Surface Preservation	● ● ○ ○ ○

Dimensions

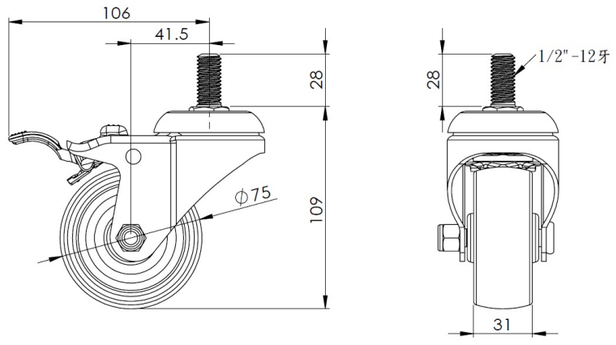

Mounting

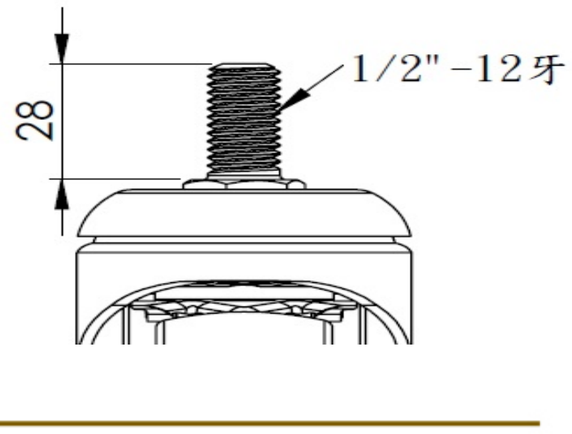

* For any deviation between metric and imperial spec, please refer to the metric spec.

© Copyright 2026 DershengInternational www.dersheng.com