Product Data Sheet

1109-HD American Mechanical Wheel Series

ZQPU Wheel Diameter × Wheel Width 75 x 41.5mm

EAN

TW-4110903004022

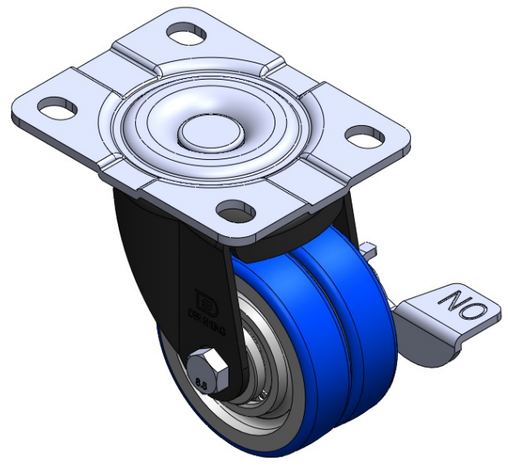

Picture may differ from original product

Equipped with side (wheel) brakes and a With locking system for the Casters. Riveted and Stamping Top Plate. Zine-Plated Top Plate, electroplated Top Plate, Mounting Type - Top Plate device. Cast Iron Wheel Center, High Quality Polyurethane Wheel Tread. Blue color, Bearing—Ball Bearings.

Wheel surface: High-quality polyurethane

Wheel Center: Iron core / Cast iron core

Drawings are for reference only and may differ from the product

Technical Data

◉ Metric ○ Imperial

Wheel Diameter	75mm
Wheel Width	41.5mm
Wheel Bearing	Wheels With Ball Bearings
Plate Size	110 x 86mm
Bolt Hole Spacing	83 x 60mm
Plate Hole	14 x 11mm
Offset	31mm
Swivel Interference	162mm
Overall Height	106mm
Swivel Radius	81mm
Hardness Of Tread	87±5° Shore A
Load Capacity (Dynamic)	450kgs
Load Capacity (Static)	675kgs
Temperature	-20°C to +70°C
Fork Type	Swivel Caster With Side Brake
Stainless	N/A
Electrical Conductivity	N/A
Anti-Static	N/A
Weight	0.95kgs
Standard	ISO22883

Advantages at a glance

Rolling Resistance	● ● ● ● ●
Operating Noise	● ● ● ● ●
Floor Surface Preservation	● ● ● ● ●

Dimensions

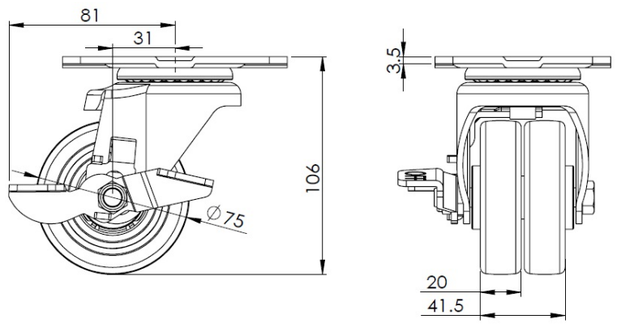

Mounting

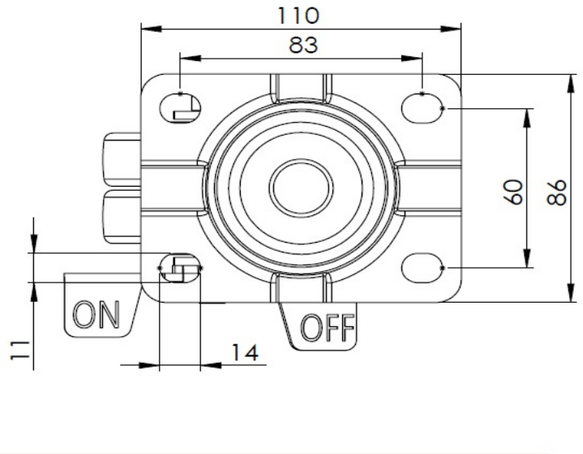

* For any deviation between metric and imperial spec, please refer to the metric spec.

© Copyright 2026 DershengInternational www.dersheng.com