Product Data Sheet

1109-HD American Mechanical Wheel Series

King Kong Wheel Diameter × Wheel Width 75 x 45mm

EAN

TW-4110903004017

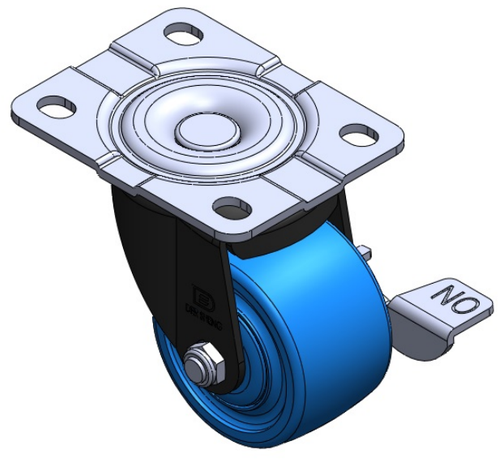

Picture may differ from original product

Equipped with side (wheel) brakes and a With locking system for the Casters. Riveted and Stamping Top Plate. Zine-Plated Top Plate, electroplated Top Plate, Mounting Type - Top Plate device. Reinforced Polypropylene and Wheel Tread. Blue Bearing—Ball Bearings.

Wheel surface: thermoplastic

Wheel Center: thermoplastic

Drawings are for reference only and may differ from the product

Technical Data

◉ Metric ○ Imperial

Wheel Diameter	75mm
Wheel Width	45mm
Wheel Bearing	Wheels With Ball Bearings
Plate Size	110 x 86mm
Bolt Hole Spacing	83 x 60mm
Plate Hole	14 x 11mm
Offset	31mm
Swivel Interference	162mm
Overall Height	106mm
Swivel Radius	81mm
Hardness Of Tread	75±5° Shore D
Load Capacity (Dynamic)	500kgs
Load Capacity (Static)	750kgs
Temperature	-20°C to +80°C
Fork Type	Swivel Caster With Side Brake
Stainless	N/A
Electrical Conductivity	N/A
Anti-Static	N/A
Weight	0.85kgs
Standard	ISO22883

Advantages at a glance

Rolling Resistance	● ● ● ● ●
Operating Noise	● ● ○ ○ ○
Floor Surface Preservation	● ● ○ ○ ○

Dimensions

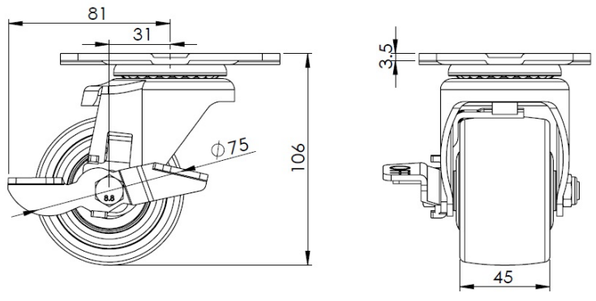

Mounting

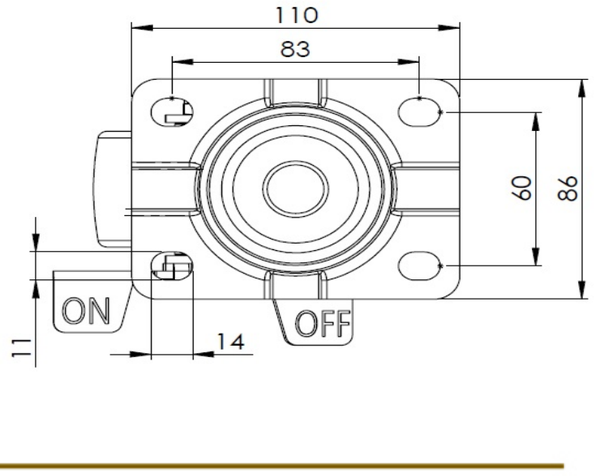

* For any deviation between metric and imperial spec, please refer to the metric spec.

© Copyright 2026 DershengInternational www.dersheng.com