Product Data Sheet

1109-HD American Mechanical Wheel Series

King Kong Wheel Diameter × Wheel Width 75 x 45mm

EAN

TW-4110903002022

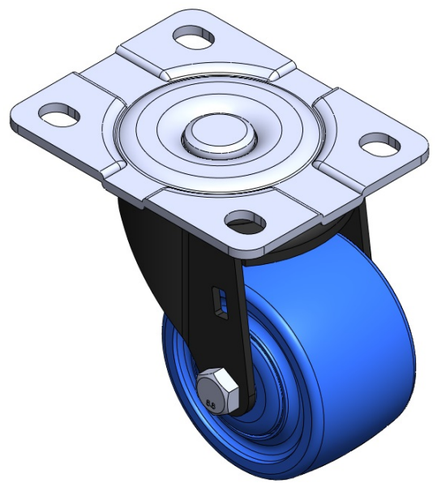

Picture may differ from original product

Swivel Casters, Riveted and Stamping Top Plate; Zine-Plated Top Plate, electroplated Top Plate, Mounting Type - Top Plate device; thermoplastic plastic Wheel Center and Wheel Tread; blue Bearing—Ball Bearings.

Wheel surface: thermoplastic

Wheel Center: thermoplastic

Drawings are for reference only and may differ from the product

Technical Data

◉ Imperial ○ Metric

Wheel Diameter	3 "
Wheel Width	1-13/16 "
Wheel Bearing	Wheels With Ball Bearings
Plate Size	4-3/8 " x 3-7/16 "
Bolt Hole Spacing	2-1/4 " x 2-3/8 "
Plate Hole	9/16 " x 3/8 "
Offset	1-1/4 "
Swivel Interference	5-7/16 "
Overall Height	4-1/4 "
Swivel Radius	2-11/16 "
Hardness Of Tread	75±5° Shore D
Load Capacity (Dynamic)	1102lbs
Load Capacity (Static)	1653lbs
Temperature	-4°F to +176°F
Fork Type	Swivel Caster
Stainless	N/A
Electrical Conductivity	N/A
Anti-Static	N/A
Weight	1.8lbs
Standard	ISO22883

Advantages at a glance

Rolling Resistance	● ● ● ● ●
Operating Noise	● ● ○ ○ ○
Floor Surface Preservation	● ● ○ ○ ○

Dimensions

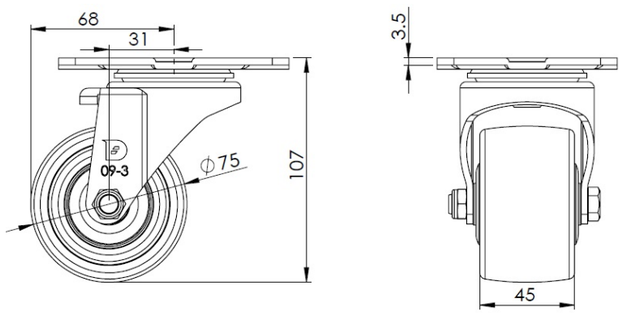

Mounting

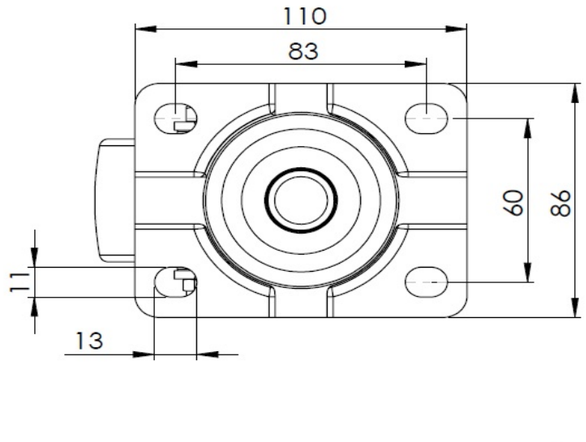

* For any deviation between metric and imperial spec, please refer to the metric spec.

© Copyright 2026 DershengInternational www.dersheng.com