1106 Medical Caster Series

PPR (S) Wheel Diameter × Wheel Width 100 x 31mm

EAN

TW-4110604002188

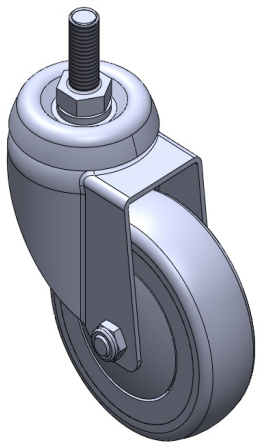

Picture may differ from original product

Casters with Side Brakes and With locking system.
Threaded Stem Riveted Pressed Fork—1/2"-12"
Zine-Plated, Mounting Type - Threaded Stem
Cast Iron core, High Quality Polyurethane Wheel Tread
Blue color, Bearing—Ball Bearings.

Wheel tread: Thermoplastic rubber elastomer (TPR)

Wheel Center: Made of high-quality impact-resistant polypropylene

Drawings are for reference only and may differ from the product

Technical Data

◉ Metric ○ Imperial

Wheel Diameter	100mm
Wheel Width	31mm
Wheel Bearing	Wheel With Plain Bearing
Threaded Stem	1/2 " -12牙
Threaded Length	32mm
Offset	40mm
Swivel Interference	180mm
Overall Height	138mm
Swivel Radius	90mm
Hardness Of Tread	82±5° Shore A
Load Capacity (Dynamic)	80kgs
Load Capacity (Static)	120kgs
Temperature	-20°C to +60°C
Fork Type	Swivel Caster
Stainless	N/A
Electrical Conductivity	N/A
Anti-Static	N/A
Weight	0.55kgs
Standard	ISO22883

Advantages at a glance

Rolling Resistance	● ● ● ● ○
Operating Noise	● ● ● ● ○
Floor Surface Preservation	● ● ● ● ●

Dimensions

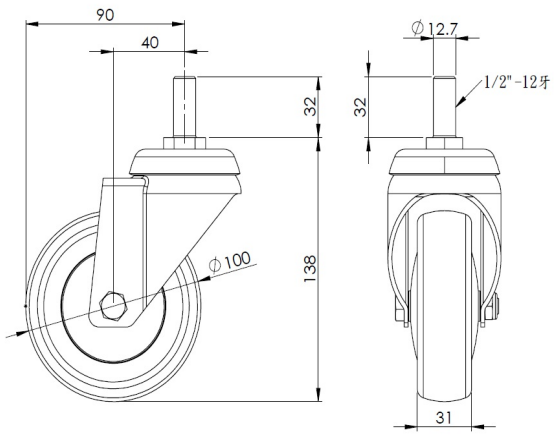

Mounting

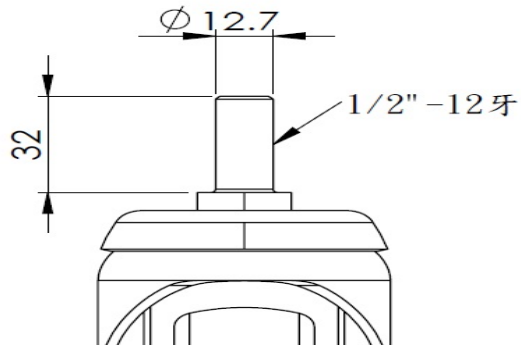

* For any deviation between metric and imperial spec, please refer to the metric spec.

© Copyright 2026 DershengInternational www.dersheng.com