Product Information Sheet

PPR Series

PPR Wheel (Gray Dark Gray Arc) Wheel Diameter × Wheel Width 38×24mm

EAN

KS-12022651103172

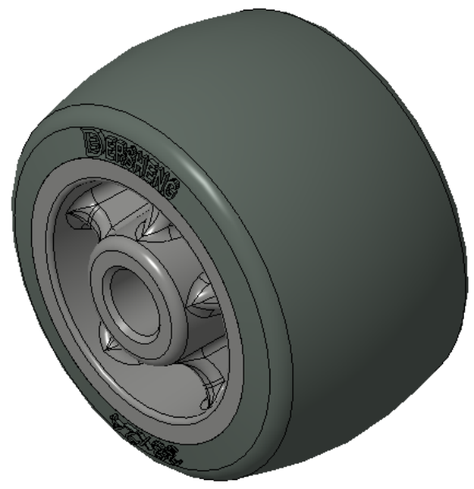

Picture may differ from original product

Easy to Floor Surface Preservation, Non-Markings, Easy To Maneuver, and can withstand heavy loads.
Low rolling and Swivel Resistance, resistant to corrosion from many corrosive substances.
Color: Dark gray, with bearing.

Wheel core: High-quality impact-resistant polypropylene
Wheel tread: Thermoplastic rubber elastomer (TPR)
Bearing: Ball bearing

Drawings are for reference only and may differ from the product

Technical Data

◉ Metric ○ Imperial

Wheel Diameter(D)	38mm
Wheel Width(T2)	24mm
Wheel Bearing	Ball Bearing
Axle Bore(d)	6.2mm
Axle Bore(S)	—
Bearing Bore Depth(t)	—
Hub Lenth(T1)	25mm
Hardness Of Tread	82±5° Shore A
Load Capacity (Dynamic)	40kgs
Load Capacity (Static)	60kgs
Temperature	-20°C to +60°C
Electrical Conductivity	N/A
Anti-Static	N/A
Weight	0.01kgs
Standard	ISO22883

Advantages at a glance

Rolling Resistance	● ● ● ● ○
Operating Noise	● ● ● ● ○
Floor Surface Preservation	● ● ● ● ●

2D Dimensional Drawing of Single Wheel

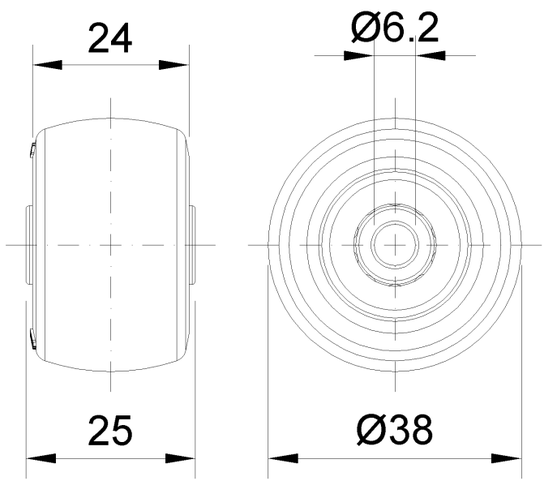

* For any deviation between metric and imperial spec, please refer to the metric spec.

© Copyright 2025 DershengInternational www.dersheng.com