1165-4 1165 Series — AMR/AGV-4 Single Precision Ball Bearing Caster (Medium Duty)Series

PPR Conductive Wheel (Black Light Gray) Wheel Diameter × Wheel Width 62.5 × 23.5mm

EAN

KS-11655204172333

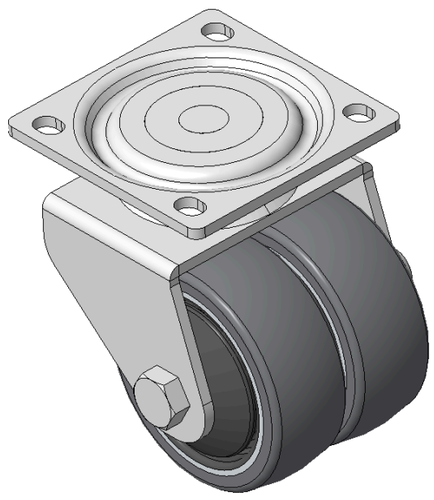

Picture may differ from original product

Drawings are for reference only and may differ from the product

Technical Data

◉ Imperial ○ Metric

Wheel Diameter	2-1/2 "
Wheel Width	23.5mm
Wheel Bearing	Wheels With Ball Bearings
Plate Size	2-11/16 " x 2-11/16 "
Bolt Hole Spacing	2-3/16 “x2-1/16”
Plate Hole	1/4 " x 3/8 "
Offset	13/16 "
Swivel Interference	4-1/2 "
Overall Height	3-7/16 "
Swivel Radius	2-1/4 "
Hardness Of Tread	87±5° Shore A
Load Capacity (Dynamic)	77lbs
Load Capacity (Static)	116lbs
Temperature	-4°F to +140°F
Fork Type	Swivel Caster
Stainless	N/A
Electrical Conductivity	Y 10^3/～10^4/Ω
Anti-Static	N/A
Weight	3.8lbs
Standard	ISO22883

Advantages at a glance

Rolling Resistance	●●●●○
Operating Noise	●●●●○
Floor Surface Preservation	●●●●●

Dimensions

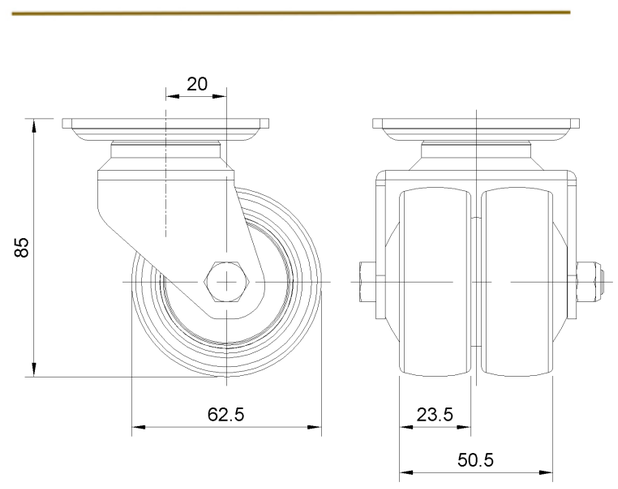

Mounting

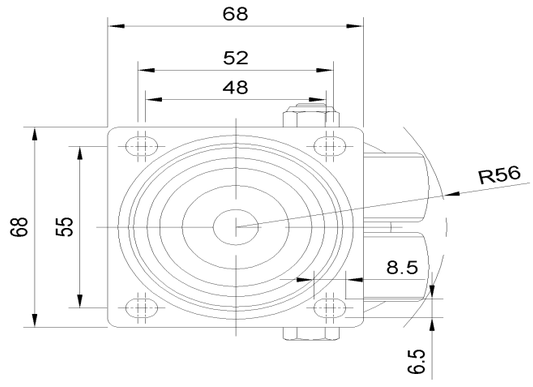

* For any deviation between metric and imperial spec, please refer to the metric spec.

© Copyright 2026 DershengInternational www.dersheng.com