1165-4 1165 Series — AMR/AGV-4 Single Precision Ball Bearing Caster (Medium Duty)Series

PPR Conductive Wheel (Black Light Gray) Wheel Diameter × Wheel Width 62.5 × 23.5mm

EAN

KS-11655204172333

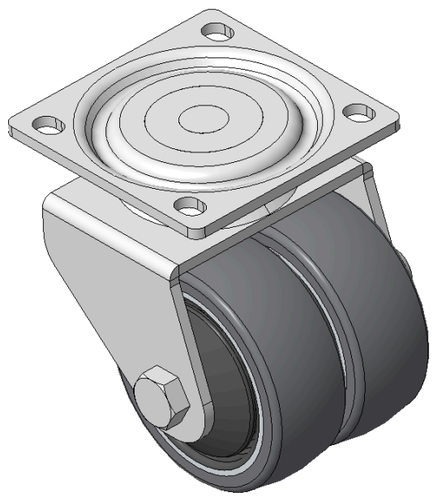

Picture may differ from original product

Drawings are for reference only and may differ from the product

Technical Data

◉ Metric ○ Imperial

Wheel Diameter	62.5mm
Wheel Width	23.5mm
Wheel Bearing	Wheels With Ball Bearings
Plate Size	68 x 68mm
Bolt Hole Spacing	55 x 52mm
Plate Hole	6.5 x 8.5mm
Offset	20mm
Swivel Interference	112mm
Overall Height	85mm
Swivel Radius	56mm
Hardness Of Tread	87±5° Shore A
Load Capacity (Dynamic)	35kgs
Load Capacity (Static)	52.5kgs
Temperature	-20°C to +60°C
Fork Type	Swivel Caster
Stainless	N/A
Electrical Conductivity	Y 10^3/～10^4/Ω
Anti-Static	N/A
Weight	1.72kgs
Standard	ISO22883

Advantages at a glance

Rolling Resistance	●●●●○
Operating Noise	●●●●○
Floor Surface Preservation	●●●●●

Dimensions

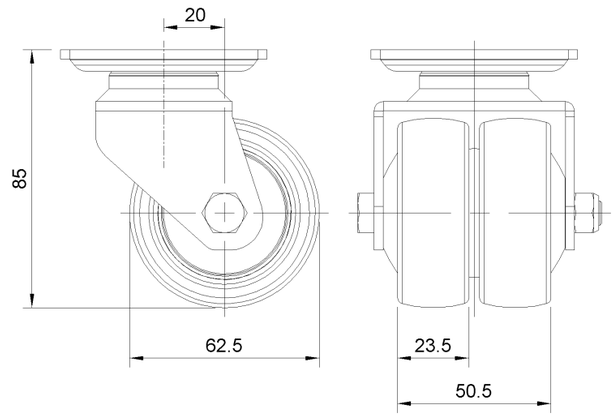

Mounting

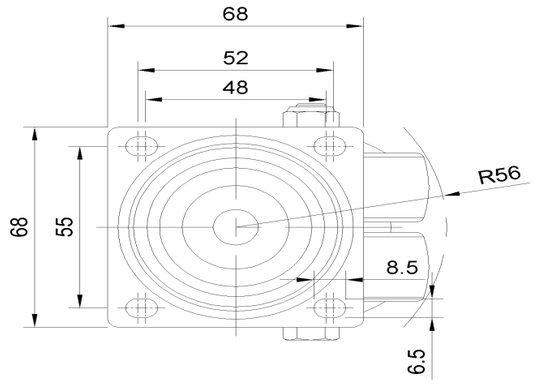

* For any deviation between metric and imperial spec, please refer to the metric spec.

© Copyright 2026 DershengInternational www.dersheng.com