# 1165-1 Heavy Duty AMR/AGV Spring-Loading Caster Wheel Series

QPU (blue round) Wheel Diameter x Wheel Width 62.5 x 45mm

EAN

KS-11655200531043

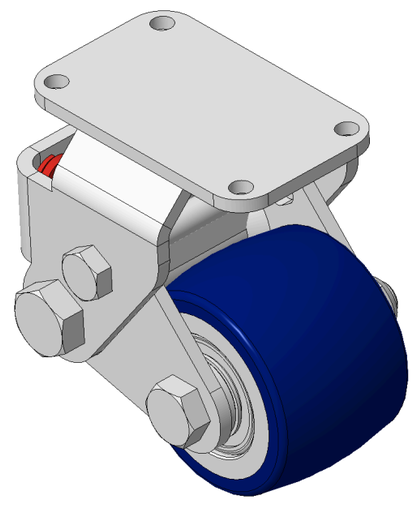

Picture may differ from original product

Drawings are for reference only and may differ from the product

## Technical Data

◉ Imperial ○ Metric

| | |
|---|---|
| Wheel Diameter | 2-1/2 " |
| Wheel Width | 1-13/16 " |
| Wheel Bearing | Wheels With Ball Bearings |
| Plate Size | 3-3/8 " x 1-15/16 " |
| Bolt Hole Spacing | |
| Plate Hole | 1/4 " |
| Overall Height | 4 " |
| Hardness Of Tread | 87±5° Shore A |
| Load Capacity (Dynamic) | 441lbs |
| Load Capacity (Static) | 661lbs |
| Temperature | -4°F to +158°F |
| Fork Type | Rigid Caster |
| Stainless | N/A |
| Electrical Conductivity | N/A |
| Anti-Static | N/A |
| Weight | 2.9lbs |
| Standard | ISO22883 |

## Advantages at a glance

| | |
|---|---|
| Rolling Resistance | ●●●●● |
| Operating Noise | ●●●●● |
| Floor Surface Preservation | ●●●●● |

## Dimensions

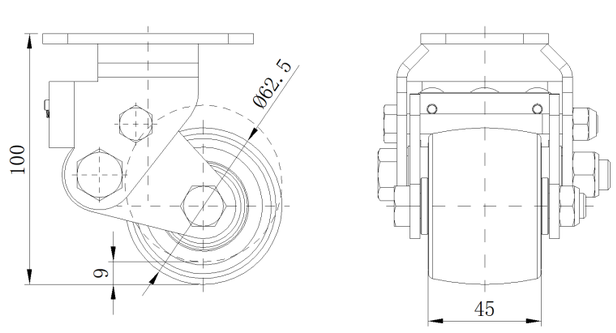


## Mounting

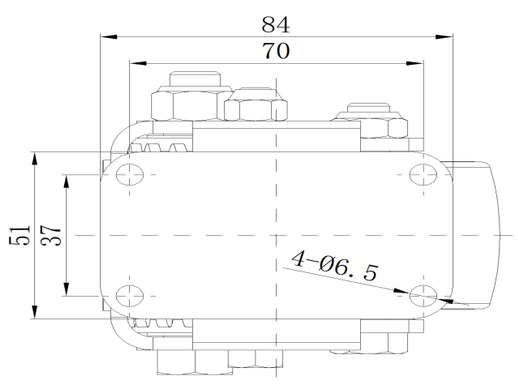


* For any deviation between metric and imperial spec, please refer to the metric spec.

© Copyright 2026 DershengInternational www.dersheng.com