1165-2 Heavy Duty AMR/AGV-2 Caster Series

QPU(brown) Wheel Diameter × Wheel Width 75 x 31mm

EAN

KS-11652302532023

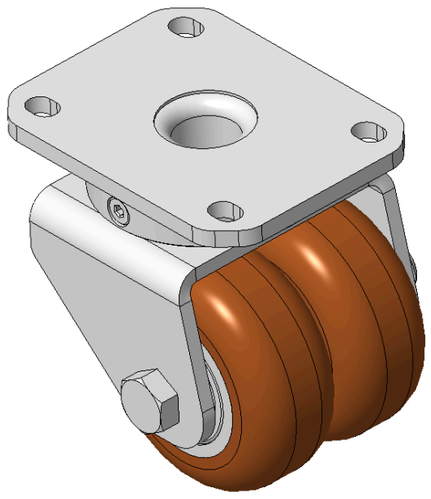

Picture may differ from original product

Drawings are for reference only and may differ from the product

Technical Data

◉ Metric ○ Imperial

Wheel Diameter	80mm
Wheel Width	35mm
Wheel Bearing	Wheels With Ball Bearings
Plate Size	110 x 85mm
Bolt Hole Spacing	80 x 60mm
Plate Hole	12 x 9mm
Offset	23mm
Swivel Interference	145mm
Overall Height	110mm
Swivel Radius	72.5mm
Hardness Of Tread	92±5° Shore A
Load Capacity (Dynamic)	250kgs
Load Capacity (Static)	375kgs
Temperature	-20°C to +70°C
Fork Type	Swivel Caster
Stainless	N/A
Electrical Conductivity	N/A
Anti-Static	N/A
Weight	2.56kgs
Standard	ISO22883

Advantages at a glance

Rolling Resistance	●●●●●
Operating Noise	●●●●●
Floor Surface Preservation	●●●●●

Dimensions

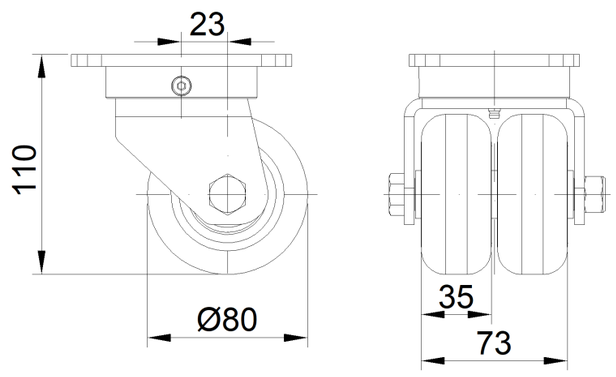

Mounting

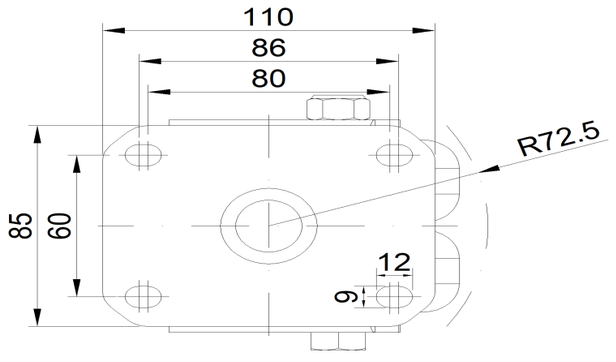

* For any deviation between metric and imperial spec, please refer to the metric spec.

© Copyright 2026 DershengInternational www.dersheng.com