AMR/AGV- 7 Shock Absorbing Caster (Medium Duty)

W Resolute (black, dark gray) Wheel Diameter × Wheel Width 125 x 38mm

EAN

KS-11650507452213

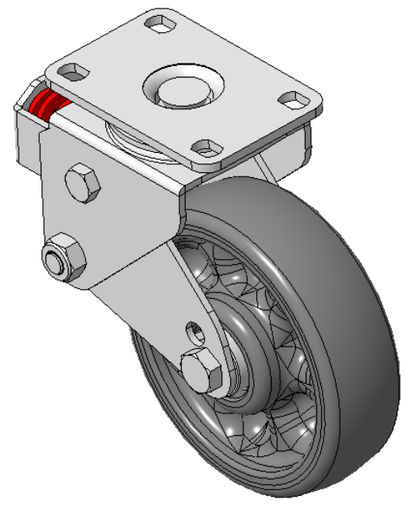

Picture may differ from original product

Drawings are for reference only and may differ from the product

Technical Data

◉ Metric ○ Imperial

Wheel Diameter	125mm
Wheel Width	37.5mm
Wheel Bearing	Wheels With Ball Bearings
Plate Size	95 x 65mm
Bolt Hole Spacing	75 x 45mm
Plate Hole	12 x 9mm
Offset	38mm
Swivel Interference	206mm
Overall Height	160mm
Swivel Radius	103mm
Hardness Of Tread	72±5° Shore A
Load Capacity (Dynamic)	125kgs
Load Capacity (Static)	187.5kgs
Temperature	-20°C to +60°C
Fork Type	Swivel Caster
Stainless	N/A
Electrical Conductivity	N/A
Anti-Static	N/A
Weight	1.69kgs
Standard	ISO22883

Advantages at a glance

Rolling Resistance	●●●●●
Operating Noise	●●●●●
Floor Surface Preservation	●●●●●

Dimensions

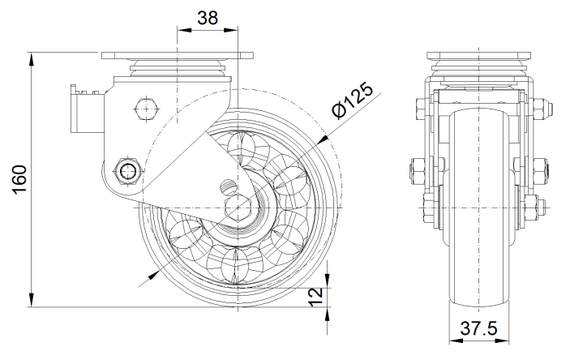

Mounting

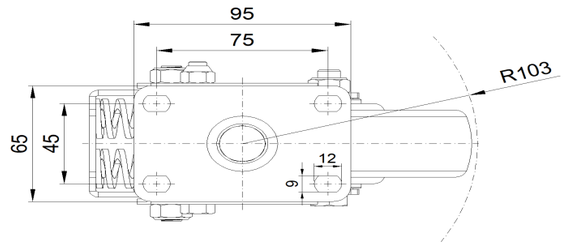

* For any deviation between metric and imperial spec, please refer to the metric spec.

© Copyright 2026 DershengInternational www.dersheng.com