1165-2 Heavy Duty AMR/AGV-2 Caster Series

ZQPU (blue round) Wheel Diameter x Wheel Width 100 x 22(46.5)mm

EAN

KS-11650402802013

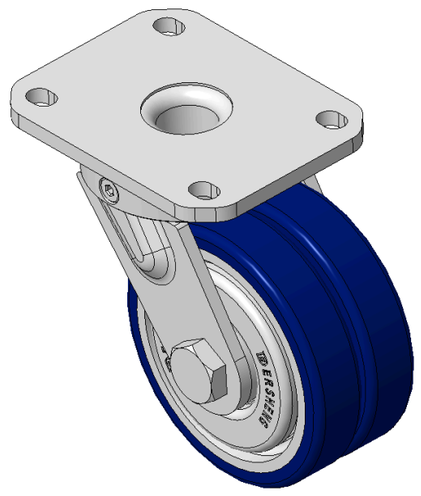

Picture may differ from original product

Drawings are for reference only and may differ from the product

Technical Data

◉ Imperial ○ Metric

Wheel Diameter	4 "
Wheel Width	7/8 "
Wheel Bearing	Wheels With Ball Bearings
Plate Size	4-3/8 " x 3-7/16 "
Bolt Hole Spacing	3-3/16 " x 2-7/16 "
Plate Hole	1/2 " x 23/64 "
Offset	1-1/2 "
Swivel Interference	7-1/4 "
Overall Height	5 "
Swivel Radius	3-5/8 "
Hardness Of Tread	87±5° Shore A
Load Capacity (Dynamic)	882lbs
Load Capacity (Static)	1323lbs
Temperature	-4°F to +158°F
Fork Type	Swivel Caster
Stainless	N/A
Electrical Conductivity	N/A
Anti-Static	N/A
Weight	6.5lbs
Standard	ISO22883

Advantages at a glance

Rolling Resistance	●●●●●
Operating Noise	●●●●●
Floor Surface Preservation	●●●●●

Dimensions

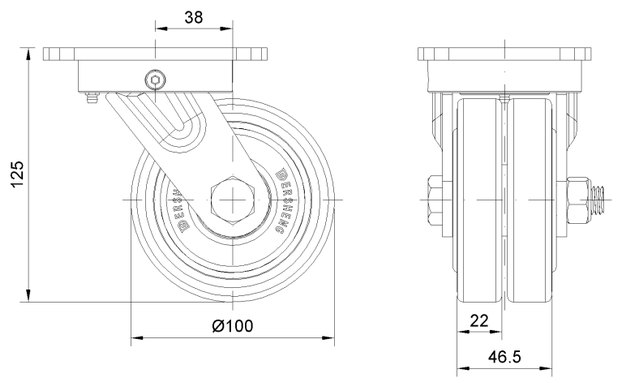

Mounting

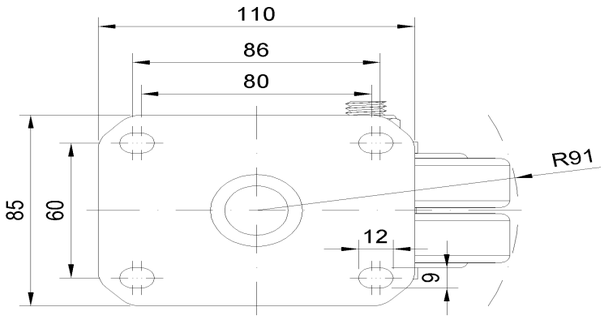

* For any deviation between metric and imperial spec, please refer to the metric spec.

© Copyright 2026 DershengInternational www.dersheng.com