1165-1 Heavy Duty AMR/AGV Spring-Loading Caster Wheel Series

Anti-static ZQPU (milling black) Wheel Diameter x Wheel Width 100 x 22（46.5） mm

EAN

KS-11650400801723

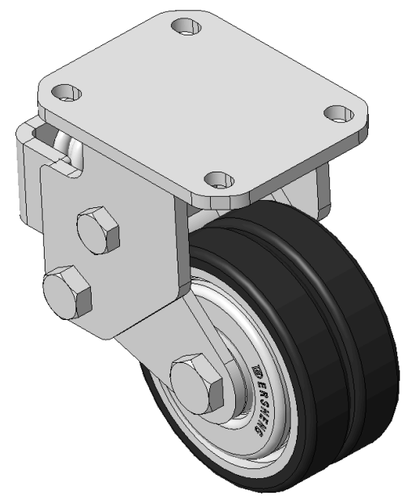

Picture may differ from original product

Drawings are for reference only and may differ from the product

Technical Data

◉ Metric ○ Imperial

Wheel Diameter	100mm
Wheel Width	22mm
Wheel Bearing	Wheels With Ball Bearings
Plate Size	110 x 85mm
Bolt Hole Spacing	80 x 60mm
Plate Hole	12 x 9mm
Overall Height	145mm
Hardness Of Tread	77±5° Shore A
Load Capacity (Dynamic)	350kgs
Load Capacity (Static)	525kgs
Temperature	-20°C to +70°C
Fork Type	Rigid Caster
Stainless	N/A
Electrical Conductivity	N/A
Anti-Static	Y 10^6/~10^9/Ω
Weight	3.24kgs
Standard	ISO22883

Advantages at a glance

Rolling Resistance	●●●●●
Operating Noise	●●●●●
Floor Surface Preservation	●●●●●

Dimensions

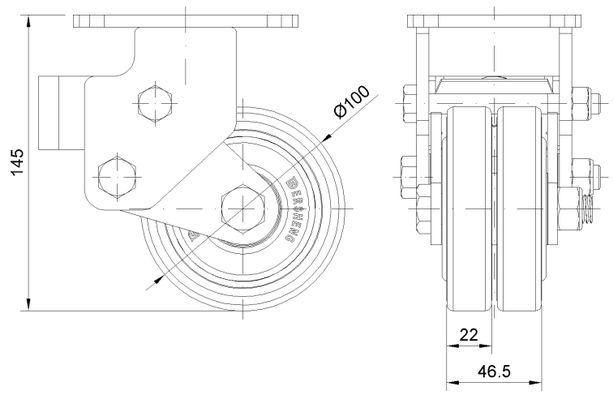

Mounting

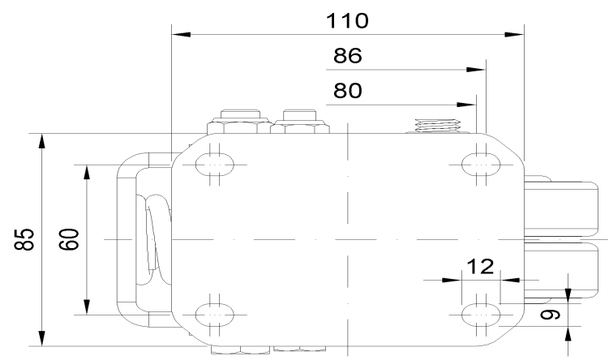

* For any deviation between metric and imperial spec, please refer to the metric spec.

© Copyright 2026 DershengInternational www.dersheng.com