Product Data Sheet

1162D Super Heavy Duty Casters Series (Double Wheel)

VXPU (burgundy round) Wheel Diameter x Wheel Width 250 x 62mm

EAN

KS-11621000694311

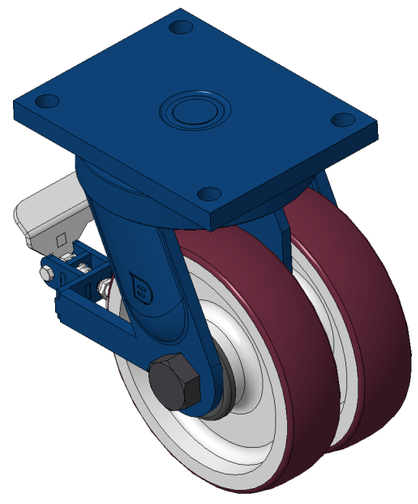

Picture may differ from original product

Rear brake Caster, Welded Caster Fork Blue painted finish, Mounting Type - Top Plate, 210x160 Bolt Hole Spacing Cast Iron Wheel Center, High Quality Polyurethane tread, burgundy color Bearing—Ball Bearing

Wheel tread: Made of high-quality polyurethane

Wheel Center: iron core/cast iron core

Drawings are for reference only and may differ from the product

Technical Data

◉ Metric ○ Imperial

Wheel Diameter	250mm
Wheel Width	62mm
Wheel Bearing	Wheels With Ball Bearings
Plate Size	255 x 200mm
Bolt Hole Spacing	210 x 160mm
Plate Hole	21mm
Offset	70mm
Swivel Interference	410mm
Overall Height	330mm
Swivel Radius	205mm
Hardness Of Tread	93±5° Shore A
Load Capacity (Dynamic)	2900kgs
Load Capacity (Static)	4350kgs
Temperature	-20°C to +70°C
Fork Type	Swivel Caster With Rear Brake
Stainless	N/A
Electrical Conductivity	N/A
Anti-Static	N/A
Weight	46.22kgs
Standard	ISO22883

Advantages at a glance

Rolling Resistance	● ● ● ○ ○
Operating Noise	● ● ● ● ○
Floor Surface Preservation	● ● ● ● ○

Dimensions

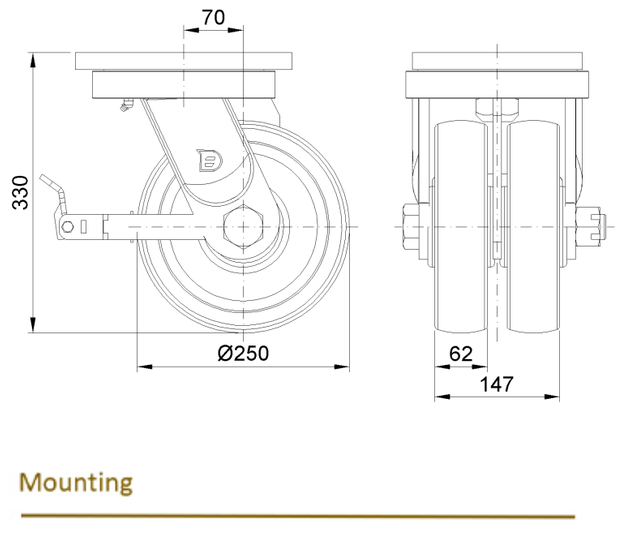

Mounting

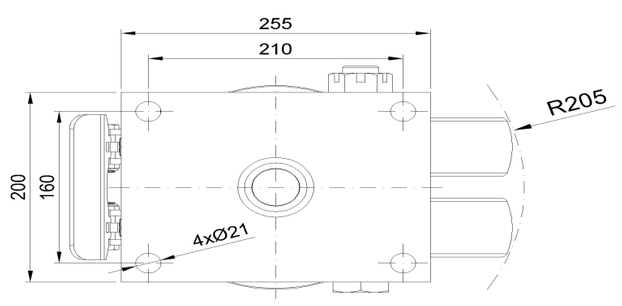

* For any deviation between metric and imperial spec, please refer to the metric spec.

© Copyright 2025 DershengInternational www.dersheng.com