Product Information Sheet

1157 57 Series Caster Series

EQPU (brown round) Wheel Diameter x Wheel Width 200 x 50mm

EAN

KS-11570800554011

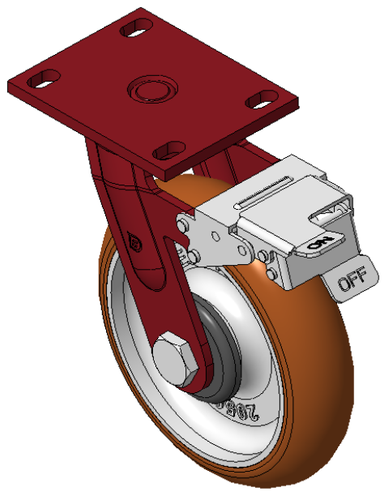

Picture may differ from original product

Equipped with front brake, With locking system Casters, Welded Caster Fork
Red paint finish, Mounting Type - Top Plate, 110x75mm Bolt Hole Spacing
Cast Iron Wheel Center, High Quality Polyurethane Wheel Tread, Cast Iron brown
Bearings—Ball Bearings

Wheel Tread: Hhigh-Quality Polyurethane

Wheel Center: Iron core / Cast iron core

Drawings are for reference only and may differ from the product

Technical Data

◉ Imperial ○ Metric

Wheel Diameter	8 "
Wheel Width	2 "
Wheel Bearing	Wheels With Ball Bearings
Plate Size	5-1/2 " x 4-5/16 "
Bolt Hole Spacing	4-5/16 " x3”
Plate Hole	7/8 " x 9/16 "
Offset	2-3/16 "
Swivel Interference	14 "
Overall Height	9-15/16 "
Swivel Radius	7-1/16 "
Hardness Of Tread	92±5° Shore A
Load Capacity (Dynamic)	1653lbs
Load Capacity (Static)	2480lbs
Temperature	-4°F to +158°F
Fork Type	Swivel Caster With Front Brake
Stainless	N/A
Electrical Conductivity	N/A
Anti-Static	N/A
Weight	14.6lbs
Standard	ISO22883

Advantages at a glance

Rolling Resistance	● ● ● ● ●
Operating Noise	● ● ● ● ●
Floor Surface Preservation	● ● ● ● ●

Dimensions

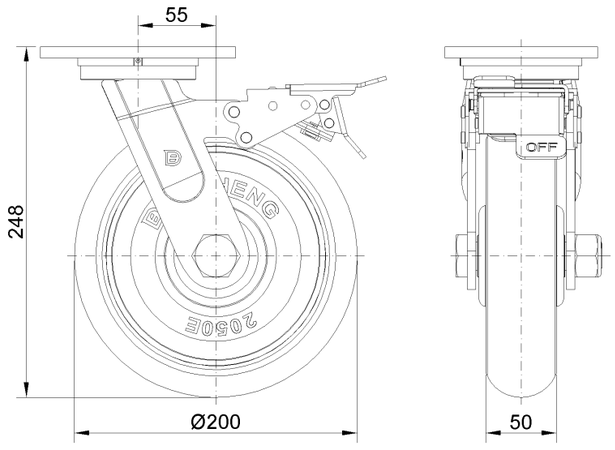

Mounting

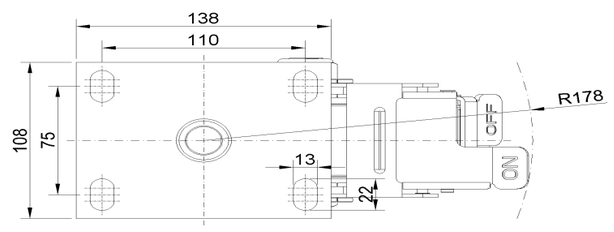

* For any deviation between metric and imperial spec, please refer to the metric spec.

© Copyright 2026 DershengInternational www.dersheng.com