Product Information Sheet

1157 57 Series Caster Series

PU (red round) Wheel Diameter x Wheel Width 150x 42mm

EAN

KS-11570600334151

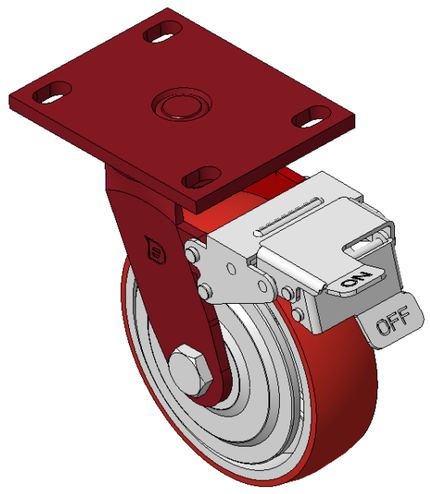

Picture may differ from original product

Features front-brake, locking Casters; Welded Caster Fork.
Red paint finish; Mounting Type - Top Plate; 110x75mm Bolt Hole Spacing.
Cast Iron Wheel Center; High Quality Polyurethane Wheel Tread; Cast Iron red finish.
Bearings—Ball Bearings.

Wheel Tread: Hhigh-Quality Polyurethane

Wheel Center: Iron core/Cast iron core

Drawings are for reference only and may differ from the product

Technical Data

◉ Metric ○ Imperial

Wheel Diameter	150mm
Wheel Width	42mm
Wheel Bearing	Wheels With Ball Bearings
Plate Size	138 x 108mm
Bolt Hole Spacing	110x75mm
Plate Hole	22 x 13mm
Offset	42mm
Swivel Interference	320mm
Overall Height	197mm
Swivel Radius	160mm
Hardness Of Tread	93±5° Shore A
Load Capacity (Dynamic)	410kgs
Load Capacity (Static)	615kgs
Temperature	-20°C to +70°C
Fork Type	Swivel Caster With Front Brake
Stainless	N/A
Electrical Conductivity	N/A
Anti-Static	N/A
Weight	4.45kgs
Standard	ISO22883

Advantages at a glance

Rolling Resistance	● ● ● ○ ○
Operating Noise	● ● ● ● ○
Floor Surface Preservation	● ● ● ● ○

Dimensions

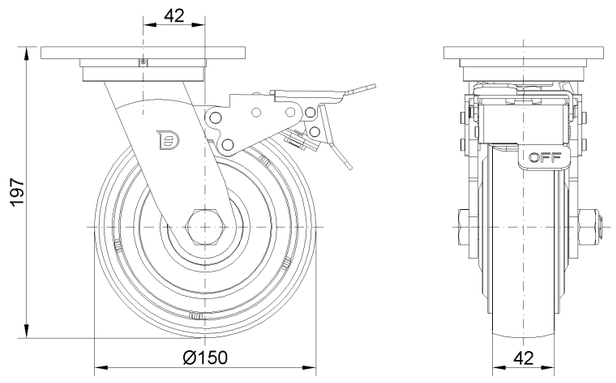

Mounting

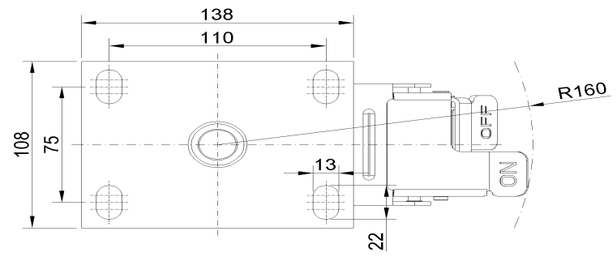

* For any deviation between metric and imperial spec, please refer to the metric spec.

© Copyright 2026 DershengInternational www.dersheng.com