Product Data Sheet

1157 57 Series Caster Series

MRC (Transparent) Wheel Diameter × Wheel Width 100 x 32mm

EAN

KS-11570400071021

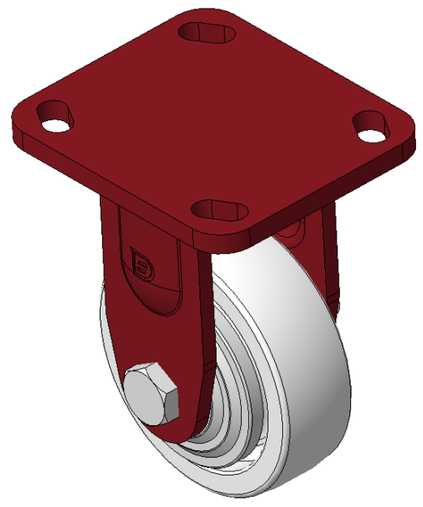

Picture may differ from original product

Rigid Caster, Welded Caster Fork Red painted finish, Mounting Type - Top Plate, 85x70 Bolt Hole Spacing Reinforced Polypropylene, natural wheel tread Bearing—Ball Bearing

Wheel tread: Thermoplastic (PA6)
Wheel Center: Thermoplastic (PA6)

Drawings are for reference only and may differ from the product

Technical Data

◉ Imperial ○ Metric

Wheel Diameter	4 "
Wheel Width	1-5/16 "
Wheel Bearing	Wheels With Ball Bearings
Plate Size	4-9/16 " x 4 "
Bolt Hole Spacing	3-3/8 " x 2-3/4 "
Plate Hole	13/16 " x 3/8 "
Overall Height	5-7/8 "
Hardness Of Tread	75±5° Shore D
Load Capacity (Dynamic)	551lbs
Load Capacity (Static)	827lbs
Temperature	-4°F to +176°F
Fork Type	Rigid Caster
Stainless	N/A
Electrical Conductivity	N/A
Anti-Static	N/A
Weight	3.4lbs
Standard	ISO22883

Advantages at a glance

Rolling Resistance	● ● ● ● ●
Operating Noise	● ● ○ ○ ○
Floor Surface Preservation	● ● ○ ○ ○

Dimensions

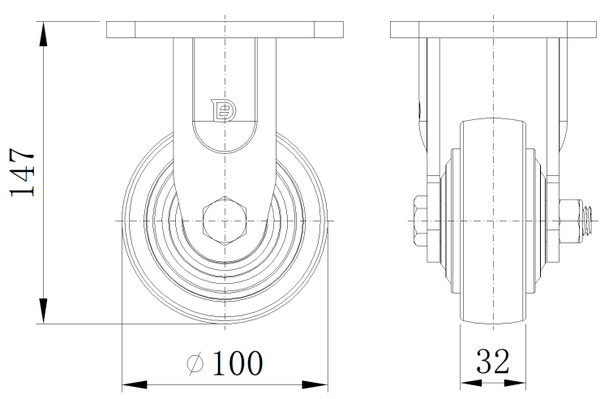

Mounting

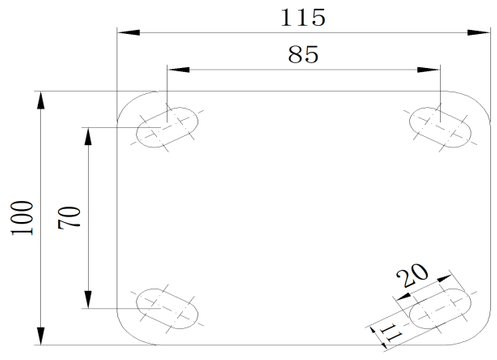

* For any deviation between metric and imperial spec, please refer to the metric spec.

© Copyright 2025 DershengInternational www.dersheng.com