# 1157 57 Series Caster Series

Non-marking NBR Rubber (milling) Wheel Diameter x Wheel Width 100 x 37mm

EAN

KS-11570400044021

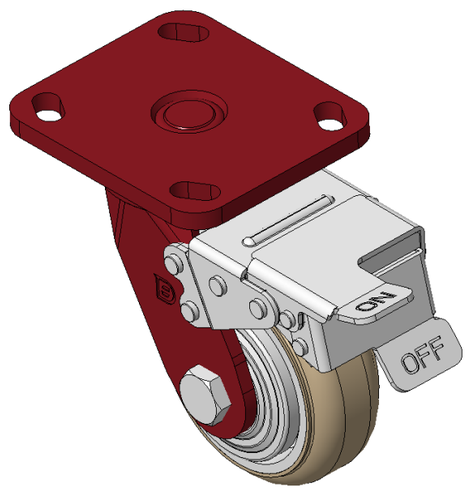


Picture may differ from original product

Casters with front brake and With locking system, Welded Caster Fork
Red painted finish, Mounting Type - Top Plate, 85x70 Bolt Hole Spacing
Cast Iron Wheel Center, High-Quality, highly Resilient Rubber Wheel Tread, Cast Iron in natural color
Bearings—Ball Bearings

Wheel surface: Made of high-quality, highly elastic rubber

Wheel Center: iron core/cast iron core

Drawings are for reference only and may differ from the product

## Technical Data

◉ Imperial ○ Metric

| | |
|---|---|
| Wheel Diameter | 4 " |
| Wheel Width | 1-3/8 " |
| Wheel Bearing | Wheels With Ball Bearings |
| Plate Size | 4-9/16 " x 4 " |
| Bolt Hole Spacing | 3-3/8 " x 2-3/4 " |
| Plate Hole | 13/16 " x 3/8 " |
| Offset | 1-5/8 " |
| Swivel Interference | 11-3/16 " |
| Overall Height | 5-7/8 " |
| Swivel Radius | 5-9/16 " |
| Hardness Of Tread | 85±5° Shore A |
| Load Capacity (Dynamic) | 441lbs |
| Load Capacity (Static) | 661lbs |
| Temperature | -4°F to +176°F |
| Fork Type | Swivel Caster With Front Brake |
| Stainless | N/A |
| Electrical Conductivity | N/A |
| Anti-Static | N/A |
| Weight | 6.0lbs |
| Standard | ISO22883 |

## Advantages at a glance

| | |
|---|---|
| Rolling Resistance | ● ● ● ○ ○ |
| Operating Noise | ● ● ● ● ○ |
| Floor Surface Preservation | ● ● ● ● ○ |

## Dimensions

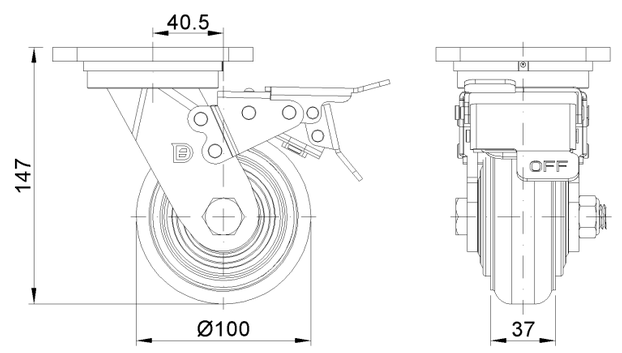


## Mounting

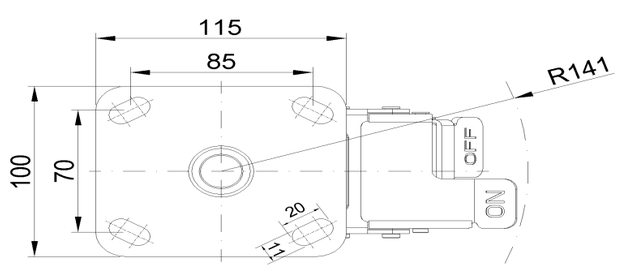


* For any deviation between metric and imperial spec, please refer to the metric spec.

© Copyright 2025 DershengInternational www.dersheng.com