1155 STAT Series Caster Series (All Plastic)

Resolute (Middle Tube Blue-Gray Dark Gray) Wheel Diameter×Wheel Width
125×31mm

EAN

KS-11550500451043

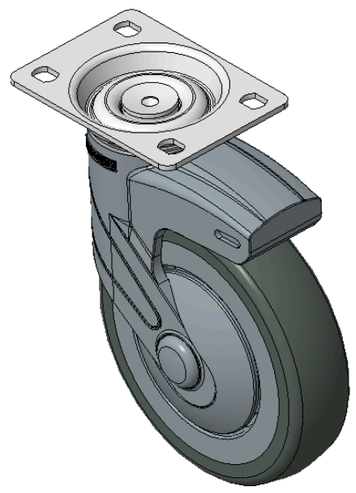

Picture may differ from original product

Drawings are for reference only and may differ from the product

Technical Data

◉ Metric ○ Imperial

Wheel Diameter	125mm
Wheel Width	31mm
Wheel Bearing	Wheel With Plain Bearing
Plate Size	96 x 69mm
Bolt Hole Spacing	75 x 45mm
Plate Hole	11 x 8.6mm
Overall Height	165.5mm
Hardness Of Tread	72±5° Shore A
Load Capacity (Dynamic)	100kgs
Load Capacity (Static)	150kgs
Temperature	-20°C to +60°C
Fork Type	Rigid Caster
Stainless	N/A
Electrical Conductivity	N/A
Anti-Static	N/A
Weight	0.85kgs
Standard	ISO22881

Advantages at a glance

Rolling Resistance	●●●●●
Operating Noise	●●●●●
Floor Surface Preservation	●●●●●

Dimensions

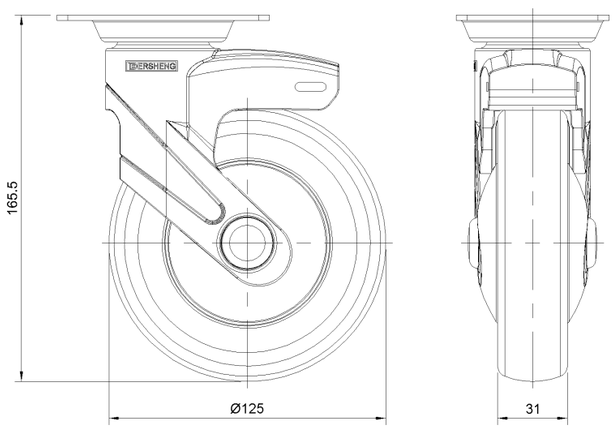

Mounting

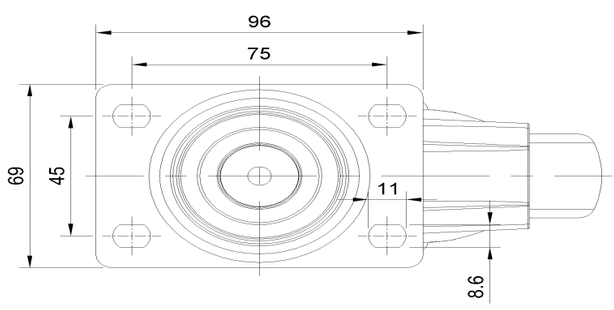

* For any deviation between metric and imperial spec, please refer to the metric spec.

© Copyright 2026 DershengInternational www.dersheng.com