Product Data Sheet

1155-1 Light Plastic-1 Series

PPR Wheel (Black Black - Plain Bearing Hub Lenth 37) Wheel Diameter x Wheel Width 100 x 24mm

EAN

KS-11550493267083

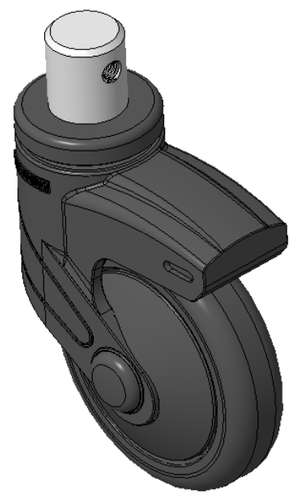

Picture may differ from original product

Rigid Casters, pin rivets—Ø28x30L Black legs made of polyamide reinforcement, pin-mounted installation Rust-proof, Corrosion resistant, Attractive appearance, Economical, and allows for smooth rotation High-Quality Impact-Resistant Polypropylene Wheel Center, High-Quality Reinforced Polypropylene Rubber (TPR) Wheel Tread Black, wheels—Plain Bearing

Wheel tread: Thermoplastic rubber elastomer (TPR)

Wheel Center: Made of high-quality impact-resistant polypropylene

Drawings are for reference only and may differ from the product

Technical Data

◉ Metric ○ Imperial

Wheel Diameter	100mm
Wheel Width	024mm
Wheel Bearing	Wheel With Plain Bearing
Stem Diameter	28mm
Stem Length	30mm
Offset	36mm
Overall Height	138mm
Hardness Of Tread	82±5° Shore A
Load Capacity (Dynamic)	80kgs
Load Capacity (Static)	120kgs
Temperature	-20°C to +60°C
Fork Type	Rigid Caster
Stainless	N/A
Electrical Conductivity	N/A
Anti-Static	N/A
Weight	0.58kgs
Standard	ISO22883

Advantages at a glance

Rolling Resistance	● ● ● ● ○
Operating Noise	● ● ● ● ○
Floor Surface Preservation	● ● ● ● ●

Dimensions

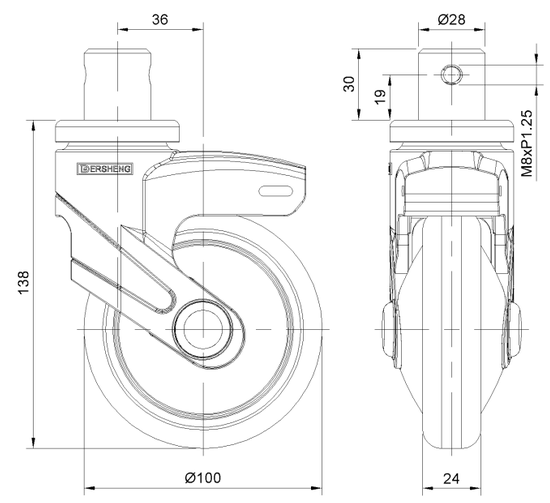

Mounting

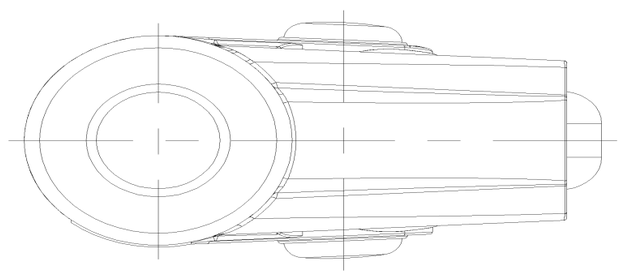

* For any deviation between metric and imperial spec, please refer to the metric spec.

© Copyright 2025 DershengInternational www.dersheng.com