1155 STAT Series Caster Series (All Plastic)

Resolute (blue gray) Wheel Diameter x Wheel Width 75 x 27mm

EAN

KS-11550300454043

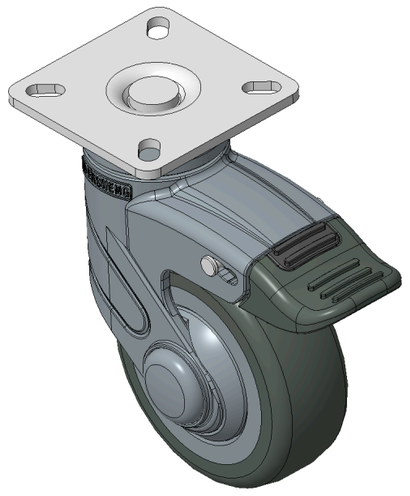

Picture may differ from original product

Drawings are for reference only and may differ from the product

Technical Data

◉ Metric ○ Imperial

Wheel Diameter	75mm
Wheel Width	27mm
Wheel Bearing	Wheels With Ball Bearings
Plate Size	60 x 60mm
Bolt Hole Spacing	42.5 x 42.5mm
Plate Hole	11 x 6mm
Offset	27mm
Swivel Interference	176mm
Overall Height	113mm
Swivel Radius	88mm
Hardness Of Tread	72±5° Shore A
Load Capacity (Dynamic)	75kgs
Load Capacity (Static)	112.5kgs
Temperature	-20°C to +60°C
Fork Type	Swivel Caster With Total Brake
Stainless	N/A
Electrical Conductivity	N/A
Anti-Static	N/A
Weight	0.36kgs
Standard	ISO22881

Advantages at a glance

Rolling Resistance	●●●●●
Operating Noise	●●●●●
Floor Surface Preservation	●●●●●

Dimensions

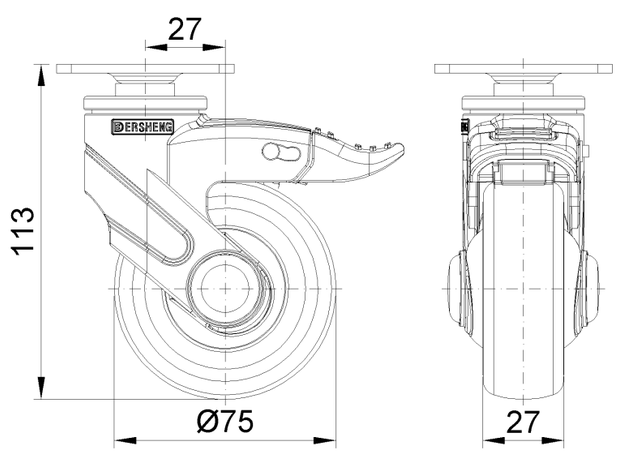

Mounting

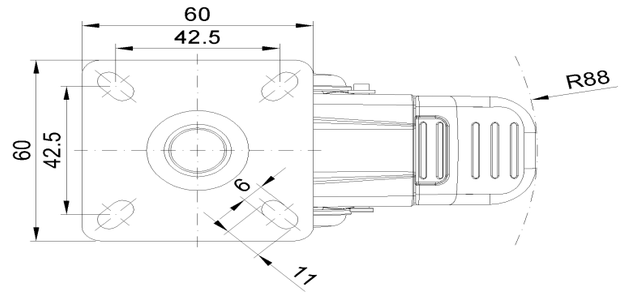

* For any deviation between metric and imperial spec, please refer to the metric spec.

© Copyright 2026 DershengInternational www.dersheng.com