Product Data Sheet

1152 Anti-Friction Caster Series

DERSHENG
Dersheng Casters Keep Rolling

QPU (Brown Flat) Wheel Diameter x Wheel Width 200 x 50mm

EAN

KS-11520800534041

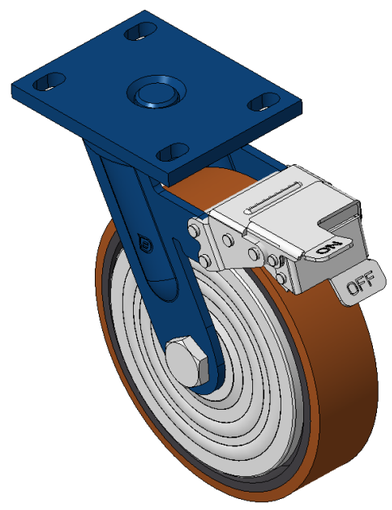

Picture may differ from original product

Castors with Front Brake locking system, Welded Caster Fork Surface sprayed with blue paint, Mounting Type - Top Plate, Hole spacing 110x75 Cast Iron Wheel Center, High Quality Polyurethane Wheel Tread, Cast Iron brown Bearing - Ball Bearing

Wheel tread: High quality polyurethane wheel tread

Wheel Center: iron core/cast iron core

Drawings are for reference only and may differ from the product

Technical Data

◉ Metric ○ Imperial

Wheel Diameter	200mm
Wheel Width	50mm
Wheel Bearing	Wheels With Ball Bearings
Plate Size	140 x 110mm
Bolt Hole Spacing	110x75mm
Plate Hole	22 x 13mm
Offset	62mm
Swivel Interference	368mm
Overall Height	248mm
Swivel Radius	184mm
Hardness Of Tread	92±5° Shore A
Load Capacity (Dynamic)	720kgs
Load Capacity (Static)	1080kgs
Temperature	-20°C to +70°C
Fork Type	Swivel Caster With Front Brake
Stainless	N/A
Electrical Conductivity	N/A
Anti-Static	N/A
Weight	6.47kgs
Standard	ISO22883

Advantages at a glance

Rolling Resistance	● ● ● ● ●
Operating Noise	● ● ● ● ●
Floor Surface Preservation	● ● ● ● ●

Dimensions

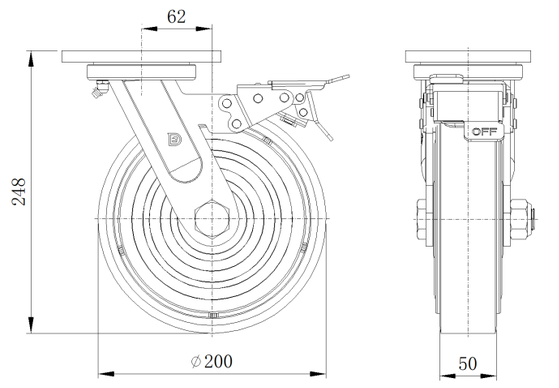

Mounting

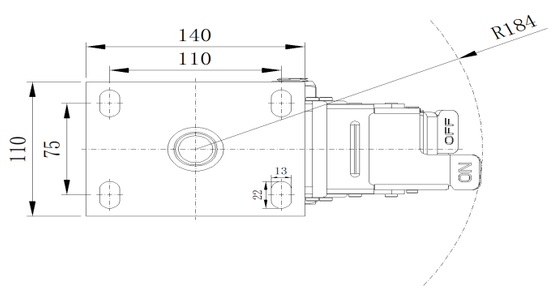

* For any deviation between metric and imperial spec, please refer to the metric spec.

© Copyright 2025 DershengInternational www.dersheng.com