1152 Anti-Friction Caster Series

PU (red round) Wheel Diameter x Wheel Width 150x 42mm

EAN

KS-11520600332161

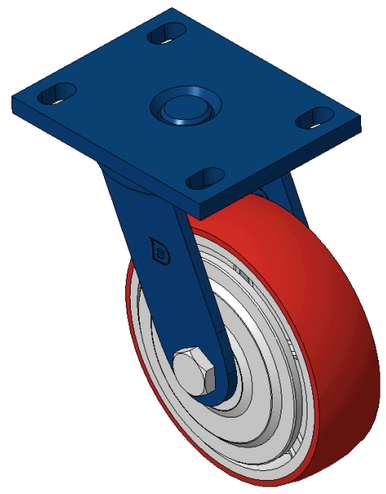

Picture may differ from original product

Drawings are for reference only and may differ from the product

Technical Data

◉ Metric ○ Imperial

Wheel Diameter	150mm
Wheel Width	42mm
Wheel Bearing	Wheels With Ball Bearings
Plate Size	140 x 110mm
Bolt Hole Spacing	110x75mm
Plate Hole	22 x 13mm
Offset	42mm
Swivel Interference	238mm
Overall Height	197mm
Swivel Radius	119mm
Hardness Of Tread	93±5° Shore A
Load Capacity (Dynamic)	410kgs
Load Capacity (Static)	615kgs
Temperature	-20°C to +70°C
Fork Type	Swivel Caster
Stainless	N/A
Electrical Conductivity	N/A
Anti-Static	N/A
Weight	4.39kgs
Standard	ISO22883

Advantages at a glance

Rolling Resistance	●●●○○
Operating Noise	●●●●○
Floor Surface Preservation	●●●●○

Dimensions

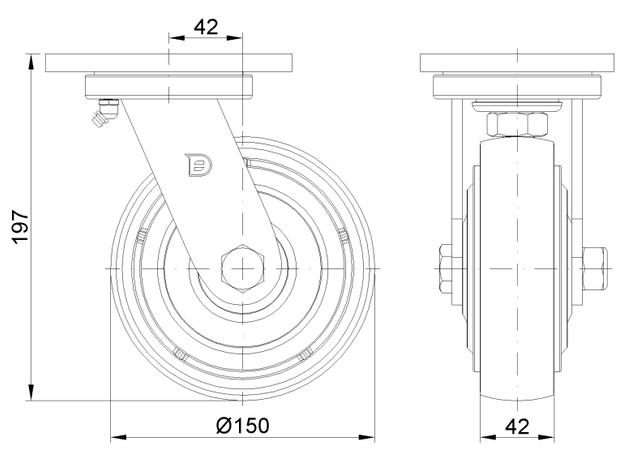

Mounting

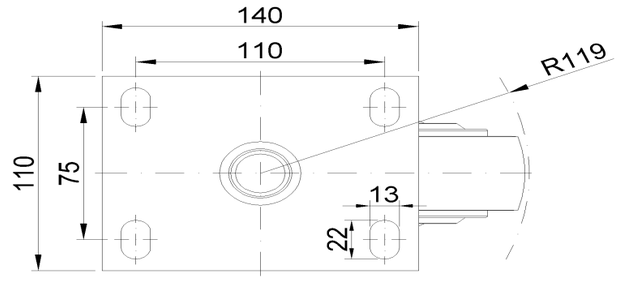

* For any deviation between metric and imperial spec, please refer to the metric spec.

© Copyright 2026 DershengInternational www.dersheng.com